FAG

Radial Insert Ball Bearings and Housing Units

Black Series

SCHAEFFLER

Foreword

FAG Black Series

The new radial insert ball bearing and housing units FAG Black Series from Schaeffler give easy mounting, smooth running and high reliability and thus allow particularly economical bearing arrangements.

The dimensions of the FAG housings, made from flake graphite cast iron and with a primer paint coating, conform to JIS B 1559. These single piece cast housings can support moderate to high radial and axial loads. The radial insert ball bearings have basic protection against corrosion due to the Durotect BS coating.

The bearing units are particularly suitable for applications with moderate to high loads.

Typical areas of application are:

- agricultural, construction and mining machinery
- power transmission and conveying equipment
- pumps
- textile, paper and woodworking machinery
- machines for the food container filling, wood and packaging industry
- steel industry.

Radial insert ball bearings

FAG radial insert ball bearings with a spherical outer ring are based on single row deep groove ball bearings 62 and are designed in accordance with JIS B 1558. The outer and inner rings as well as the flinger shields of the radial insert ball bearings are provided with the Durotect BS coating in order to offer basic protection against corrosion. The Black Series radial insert ball bearings are available with two location methods and one type of seal. They can be relubricated and are particularly easy to install.

Housing units with flake graphite cast iron housings

Housing units in accordance with JIS B 1557 comprise FAG flake graphite cast iron housings with a concave bore in which FAG radial insert ball bearings are fitted. These units are matched to each other and are available as plummer block housing units, flanged housing units and take-up housing units.

Radial insert ball bearings with a spherical outer ring, when fitted in housings with a concave bore, can compensate for static misalignment of the shaft.

Housing units are supplied with a loose packed lubrication nipple and integrated end cap for the lubrication nipple as well as an Allen key.

Contents

Page

Radial insert ball bearings 4

Housing units 22

Radial insert ball bearings

Radial insert ball bearings

		Page
Matrix	Features of radial insert ball bearings, comparison of series	6
Product overview	Radial insert ball bearings	8
Features	Anti-corrosion protection	9
	Location on shaft	9
	Sealing	10
	Operating temperature	10
Design and safety guidelines	Compensation of static misalignments	11
	Minimum radial load	11
	Speed limits for radial insert ball bearings	12
	Shaft tolerances for radial insert ball bearings	13
Accuracy	Standard tolerances of radial insert ball bearings	13
	Radial internal clearance of radial insert ball bearings	14
Dimension tables	Radial insert ball bearings with grub screws in inner ring, spherical outer ring	16
	Radial insert ball bearings with adapter sleeve, spherical outer ring	20

Features of radial insert ball bearings, comparison of series

Series	Shaft diameter				Location
	mm		inch		
	from	to	from	to	
UC	12	90	1/2	3 1/2	Grub screw
UK	20	80	–	–	Adapter sleeve to JIS B 1552

1) Attention!
Recommended operating temperature of bearing series.
If temperatures exceed +100 °C, relubrication must be carried out regularly.

2) Temperature peaks of up to +120 °C possible for short periods.

Seal	Compensation of misalignment	Internal clearance	Cage	Grease	Relubrication facility	Temperature[1] °C		Comments	Dimension table
						from	up to		Page
RSR	yes	C3	PA66	GA13	yes	–20	+100[2]	Corrosion-resistant	16
RSR	yes	C4	PA66	GA13	yes	–20	+100[2]	Corrosion-resistant	20

With grub screws in inner ring

Spherical outer ring

UC

With adapter sleeve

Spherical outer ring

UK

Radial insert ball bearings

Features

These radial insert ball bearings are based on single row deep groove ball bearings 62 and comprise a solid section outer ring and an inner ring extended on both sides.

The bearings have plastic cages and are sealed on both sides by single piece seals RSR with a vulcanised seal lip and an outer flinger shield.

The honed raceways of the bearing rings, in conjunction with the high ball grade, ensure quiet running and a reduced frictional torque.

The outer ring has a spherical outside surface. In combination with a housing matched to the design, bearings with a spherical outer ring can compensate static misalignments of the shaft, see page 11.

The radial insert ball bearings are pregreased and can be relubricated by means of two lubrication holes in the outer ring.

Inch size designs

The radial insert ball bearings are also available with inch size bore dimensions, see dimension table.

Anti-corrosion protection

The inner and outer rings as well as the flinger shields of the radial insert ball bearings are provided with the black Durotect BS coating in order to offer basic protection against corrosion.

Adapter sleeves have a Durotect BS or phosphate coating.

Location on shaft

Radial insert ball bearings are particularly easy to fit and are preferentially suitable for drawn shafts with the tolerances h6 Ⓔ to h9 Ⓔ.

In the radial insert ball bearings UC, the inner ring is located on the shaft by means of two grub screws offset by 120°, *Figure 1*, page 10. They are suitable for bearing arrangements with a constant direction of rotation or, under low speed and load, for an alternating direction of rotation.

The grub screws are self-retaining and have a fine pitch thread with cup point for secure location of the bearings. In order to allow better differentiation, the metric grub screws have a Durotect BS coating while the inch size grub screws are zinc plated.

In the case of radial insert ball bearings UK, the inner ring is located on the shaft by means of a concentric adapter sleeve in accordance with JIS B 1552, *Figure 2*, page 10. The roughness of the adapter sleeve on the inside and outside is Ra 2,5. They are suitable for bearing arrangements with an alternating direction of rotation, even under high speed and load.

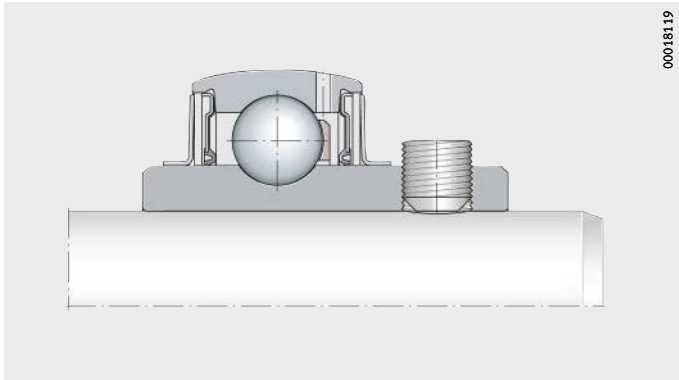

UC

Figure 1
Location by grub screws in the inner ring

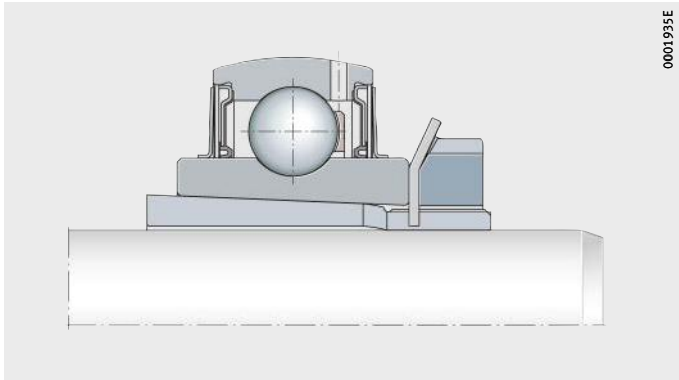

UK

Figure 2
Location by adapter sleeve

Tightening torques

Tightening torques for metric and inch size grub screws, see table, page 34.
Tightening torques for locknuts, see table, page 35.

Sealing

FAG Black Series radial insert ball bearings are supplied with seals RSR, see table.

Seal types

Seal RSR	
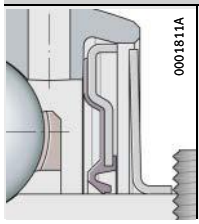	Single piece, zinc plated sheet steel washer with vulcanised and radially preloaded seal lip made from NBR and additional flinger shield

Operating temperature

The insert bearings are suitable for operating temperatures of –20 °C to +100 °C. Temperature peaks of up to +120 °C are possible for short periods.

In the case of temperatures over ϑ = +100 °C, relubrication must be carried out regularly.

Design and safety guidelines

Compensation of static misalignments

Bearings with a spherical outer ring, fitted in housings with a concave bore, can compensate for static misalignment of the shaft, *Figure 3*:

For units with a lubrication groove in the housing and a lubrication hole in the radial insert ball bearing, the following applies:

- Up to ±2,5°, the units can be relubricated.
- Between ±2,5° and ±5°, the facility for relubrication is dependent on the specific unit. Please contact us in this case.
- Above ±5°, relubrication is no longer possible.

The units must not be used to support swivelling or tumbling motion.

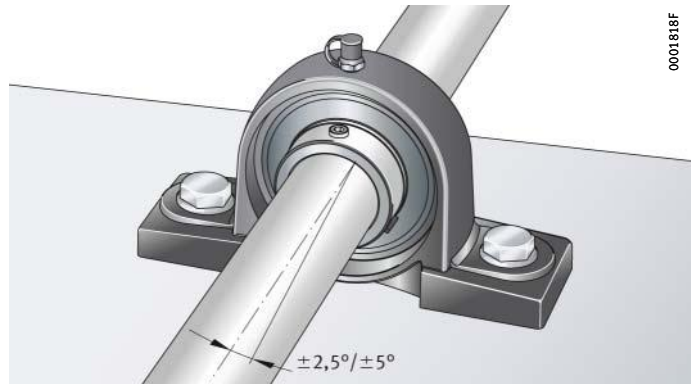

Figure 3
Compensation of static shaft misalignment

Minimum radial load

In order to ensure slippage-free operation, the bearings must be subjected to a minimum radial load. This applies particularly in the case of high speeds and high accelerations. In continuous operation, a minimum radial load of the order of $P \geqq 0{,}01 \cdot C_r$ is necessary for ball bearings with cage.

Speed limits for radial insert ball bearings

The speed limits are dependent on the load, the clearance between the bearing bore and shaft and the friction of the seals in the case of bearings with contact seals.

Guide values for the permissible speeds can be derived from the diagram, *Figure 4*.

In the case of load ratios $C_r/P > 13$, the speeds can be increased. At $C_r/P < 5$, location by means of a fit is recommended, see section Conditions of rotation, chapter Technical principles, Catalogue HR 1, Rolling Bearings. For both types of applications, please contact us.

Example of permissible speed calculation

Given:

- Shaft tolerance — h6 Ⓔ
- Radial insert ball bearing — UC206
- Basic dynamic load rating C_r — 20 700 N
- Load P — 1 300 N
- Sealing — Seals RSR.

Required:

- Load ratio $C_r/P = 20\,700\ N/1\,300\ N$ — $C_r/P > 13$
- Permissible speed — $n \approx 4\,300\ min^{-1}$, *Figure 4*.

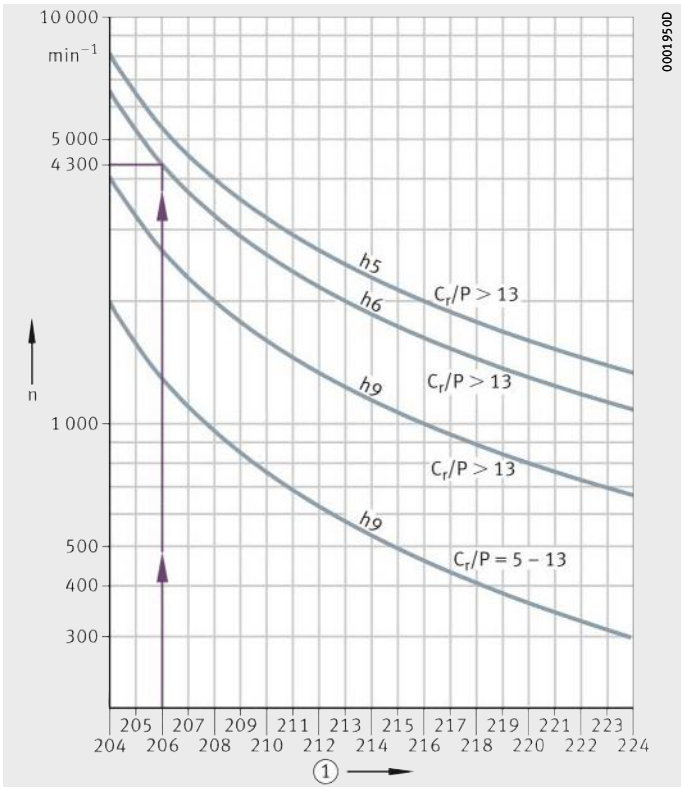

n = permissible speed

h5, h6, h9 = shaft tolerance (this is subject to the envelope requirement Ⓔ)

C_r/P = load ratio

① Ball set (bearings of sizes 201, 202, 203 and 204 all have the ball set 204)

Figure 4
Permissible speeds for radial insert ball bearings with seals RSR

Shaft tolerances for radial insert ball bearings

The permissible shaft tolerance is dependent on the speed and load. Tolerances h6 Ⓔ to h9 Ⓔ are recommended.

Conventional drawn shafts will suffice for most applications.

Accuracy Standard tolerances of radial insert ball bearings

The outside diameter tolerances of the bearings conform to the tolerances in accordance with JIS B 1558. The inner ring bore has a plus tolerance to allow easier mounting of the bearing, see tables.

Inner ring tolerances

Nominal bearing bore diameter d mm		Variation[1] Δ_{dmp} µm		Width deviation Δ_{Bs} µm	
over	incl.	min.	max.	min.	max.
10	18	0	+15	−120	0
18	31,75	0	+18	−120	0
31,75	50,8	0	+21	−120	0
50,8	80,962	0	+24	−150	0
80,962	120	0	+28	−200	0

[1] This corresponds to the arithmetic mean value derived from the largest and smallest diameters (measured using a two-point measuring device).

Outer ring tolerances

Nominal outside diameter D_{sp} mm		Variation[1] Δ_{Dm} µm	
over	incl.	min.	max.
30	50	−11	0
50	80	−13	0
80	120	−15	0
120	150	−18	0
150	180	−25	0
180	250	−30	0

[1] In the case of sealed bearings, the largest and smallest values of the outside diameter can deviate from the mean value by approx. 0,03 mm.

Radial internal clearance of radial insert ball bearings

The radial internal clearance in accordance with JIS B 1520 is C3 for radial insert ball bearings UC and C4 for radial insert ball bearings UK. It is thus larger than in the case of normal deep groove ball bearings, see table.

The larger internal clearance allows better support of misalignments and shaft deflection.

Radial internal clearance

Bore d		Ball set	Outside diameter D	Radial internal clearance			
				C3 µm		C4 µm	
mm	inch		mm	min.	max.	min.	max.
12	–	204	47	13	28	20	36
12,7	1/2						
14,288	9/16						
15	–						
15,875	5/8						
17	–						
17,462	11/16						
19,05	3/4						
20	–						
20,638	13/16	205	52	13	28	23	41
22,225	7/8						
23,812	15/16						
25	–						
25,4	1						
26,988	1 1/16	206	62				
28,575	1 1/8						
30	–						
30,162	1 3/16						
31,75	1 1/4						
31,75	1 1/4	207	72	15	33	28	46
33,338	1 5/16						
34,925	1 3/8						
35	–						
36,512	1 7/16						
38,1	1 1/2	208	80				
39,688	1 9/16						
40	–						
41,275	1 5/8	209	85	18	36	30	51
42,862	1 11/16						
44,45	1 3/4						
45	–						
46,038	1 13/16	210	90				
47,625	1 7/8						
49,212	1 15/16						
50	–						
50,8	2						

Radial internal clearance
(continued)

Bore d mm	Bore d inch	Ball set	Outside diameter D mm	Radial internal clearance C3 µm min.	C3 µm max.	C4 µm min.	C4 µm max.
50,8	2	211	100	23	43	38	61
52,388	$2^{1}/_{16}$						
53,975	$2^{1}/_{8}$						
55	–						
55,562	$2^{3}/_{16}$						
57,15	$2^{1}/_{4}$	212	110				
58,738	$2^{5}/_{16}$						
60	–						
60,325	$2^{3}/_{8}$						
61,912	$2^{7}/_{16}$						
63,5	$2^{1}/_{2}$	213	120				
65	–						
65,09	$2^{9}/_{16}$						
66,675	$2^{5}/_{8}$	214	125	25	51	46	71
68,262	$2^{11}/_{16}$						
69,85	$2^{3}/_{4}$						
70	–						
71,438	$2^{13}/_{16}$	215	130				
73,025	$2^{7}/_{8}$						
74,612	$2^{15}/_{16}$						
75	–						
76,2	3						
77,787	$3^{1}/_{16}$	216	140				
79,375	$3^{1}/_{8}$						
80	–						
80,962	$3^{3}/_{16}$						
82,55	$3^{1}/_{4}$	217	150	30	58	53	84
84,137	$3^{5}/_{16}$						
85	–						
87,312	$3^{7}/_{16}$						
88,9	$3^{1}/_{2}$	218	160				
90	–						
93,662	$3^{11}/_{16}$	219	170				
95	–						
100	–	220	180				
100,012	$3^{15}/_{16}$						
101,6	4						

Radial insert ball bearings with grub screws in inner ring

Spherical outer ring

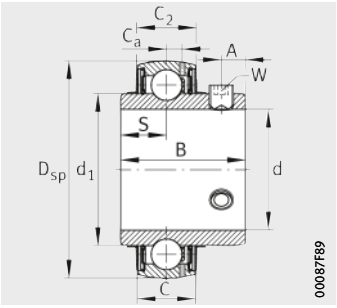

UC

Dimension table · Dimensions in mm and inch

Designation	Mass	Dimensions						
	m	d		D_{sp}	C	C_2	B	S
	≈ kg	mm	inch					
UC201	0,2	**12**	–	47	17	16,8	31	12,7
UC201-08	0,2	**12,7**	***1/2***	47	17	16,8	31	12,7
UC202-09	0,19	**14,288**	***9/16***	47	17	16,8	31	12,7
UC202	0,18	**15**	–	47	17	16,8	31	12,7
UC202-10	0,18	**15,875**	***5/8***	47	17	16,8	31	12,7
UC203	0,17	**17**	–	47	17	16,8	31	12,7
UC203-11	0,17	**17,463**	***11/16***	47	17	16,8	31	12,7
UC204-12	0,16	**19,05**	***3/4***	47	17	16,8	31	12,7
UC204	0,15	**20**	–	47	17	16,8	31	12,7
UC205-13	0,24	**20,638**	***13/16***	52	17	17,6	34,1	14,3
UC205-14	0,22	**22,225**	***7/8***	52	17	17,6	34,1	14,3
UC205-15	0,21	**23,813**	***15/16***	52	17	17,6	34,1	14,3
UC205	0,2	**25**	–	52	17	17,6	34,1	14,3
UC205-16	0,19	**25,4**	***1***	52	17	17,6	34,1	14,3
UC206-17	0,35	**26,988**	***1 1/16***	62	19	19,6	38,1	15,9
UC206-18	0,33	**28,575**	***1 1/8***	62	19	19,6	38,1	15,9
UC206	0,31	**30**	–	62	19	19,6	38,1	15,9
UC206-19	0,31	**30,163**	***1 3/16***	62	19	19,6	38,1	15,9
UC206-20	0,29	**31,75**	***1 1/4***	62	19	19,6	38,1	15,9
UC207-20	0,52	**31,75**	***1 1/4***	72	20	20,6	42,9	17,5
UC207-21	0,5	**33,338**	***1 5/16***	72	20	20,6	42,9	17,5
UC207-22	0,47	**34,925**	***1 3/8***	72	20	20,6	42,9	17,5
UC207	0,47	**35**	–	72	20	20,6	42,9	17,5
UC207-23	0,44	**36,513**	***1 7/16***	72	20	20,6	42,9	17,5
UC208-24	0,66	**38,1**	***1 1/2***	80	21	21,6	49,2	19
UC208-25	0,63	**39,688**	***1 9/16***	80	21	21,6	49,2	19
UC208	0,62	**40**	–	80	21	21,6	49,2	19
UC209-26	0,79	**41,275**	***1 5/8***	85	22	22,6	49,2	19
UC209-27	0,75	**42,863**	***1 11/16***	85	22	22,6	49,2	19
UC209-28	0,71	**44,45**	***1 3/4***	85	22	22,6	49,2	19
UC209	0,69	**45**	–	85	22	22,6	49,2	19
UC210-29	0,92	**46,038**	***1 13/16***	90	24	24,6	51,6	19
UC210-30	0,87	**47,625**	***1 7/8***	90	24	24,6	51,6	19
UC210-31	0,82	**49,213**	***1 15/16***	90	24	24,6	51,6	19
UC210	0,8	**50**	–	90	24	24,6	51,6	19
UC210-32	0,77	**50,8**	***2***	90	24	24,6	51,6	19

			Width across flats		Basic load ratings		Fatigue limit load	Factor
d_1	C_a	A	W		dyn. C_r	stat. C_{0r}	C_{ur}	f_0
			mm	inch	N	N	N	
27,56	4,2	5	3	–	13 600	6 600	335	13,1
27,56	4,2	5	–	1/8	13 600	6 600	335	13,1
27,56	4,2	5	–	1/8	13 600	6 600	335	13,1
27,56	4,2	5	3	–	13 600	6 600	335	13,1
27,56	4,2	5	–	1/8	13 600	6 600	335	13,1
27,56	4,2	5	3	–	13 600	6 600	335	13,1
27,56	4,2	5	–	1/8	13 600	6 600	335	13,1
27,56	4,2	5	–	1/8	13 600	6 600	335	13,1
27,56	4,2	5	3	–	13 600	6 600	335	13,1
33,83	4,2	5	–	1/8	14 900	7 800	395	13,8
33,83	4,2	5	–	1/8	14 900	7 800	395	13,8
33,83	4,2	5	–	1/8	14 900	7 800	395	13,8
33,83	4,2	5	3	–	14 900	7 800	395	13,8
33,83	4,2	5	–	1/8	14 900	7 800	395	13,8
40,2	5	5	–	1/8	20 700	11 300	570	13,8
40,2	5	5	–	1/8	20 700	11 300	570	13,8
40,2	5	5	3	–	20 700	11 300	570	13,8
40,2	5	5	–	1/8	20 700	11 300	570	13,8
40,2	5	5	–	1/8	20 700	11 300	570	13,8
46,84	5,7	7	–	5/32	27 500	15 300	770	13,8
46,84	5,7	7	–	5/32	27 500	15 300	770	13,8
46,84	5,7	7	–	5/32	27 500	15 300	770	13,8
46,84	5,7	7	4	–	27 500	15 300	770	13,8
46,84	5,7	7	–	5/32	27 500	15 300	770	13,8
52,27	6,2	8	–	5/32	34 500	19 800	1 010	14
52,27	6,2	8	–	5/32	34 500	19 800	1 010	14
52,27	6,2	8	4	–	34 500	19 800	1 010	14
57,91	6,3	8	–	5/32	34 500	20 400	1 030	14,3
57,91	6,3	8	–	5/32	34 500	20 400	1 030	14,3
57,91	6,3	8	–	5/32	34 500	20 400	1 030	14,3
57,91	6,3	8	4	–	34 500	20 400	1 030	14,3
62,84	6,5	10	–	3/16	37 500	23 200	1 180	14,3
62,84	6,5	10	–	3/16	37 500	23 200	1 180	14,3
62,84	6,5	10	–	3/16	37 500	23 200	1 180	14,3
62,84	6,5	10	5	–	37 500	23 200	1 180	14,3
62,84	6,5	10	–	3/16	37 500	23 200	1 180	14,3

Radial insert ball bearings with grub screws in inner ring

Spherical outer ring

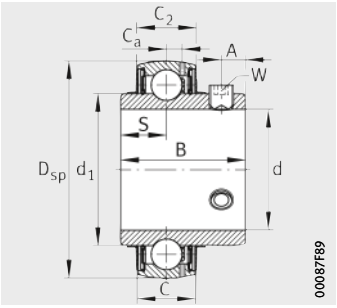

UC

Dimension table (continued) · Dimensions in mm and inch

Designation	Mass	Dimensions						
	m	d		D_{sp}	C	C_2	B	S
	≈ kg	mm	inch					
UC211-32	1,22	**50,8**	***2***	100	25	25,6	55,6	22,2
UC211-33	1,17	**52,388**	***2 1/16***	100	25	25,6	55,6	22,2
UC211-34	1,11	**53,975**	***2 1/8***	100	25	25,6	55,6	22,2
UC211	1,07	**55**	–	100	25	25,6	55,6	22,2
UC211-35	1,05	**55,563**	***2 3/16***	100	25	25,6	55,6	22,2
UC212-36	1,62	**57,15**	***2 1/4***	110	27	27,6	65,1	25,4
UC212-37	1,55	**58,738**	***2 5/16***	110	27	27,6	65,1	25,4
UC212	1,49	**60**	–	110	27	27,6	65,1	25,4
UC212-38	1,48	**60,325**	***2 3/8***	110	27	27,6	65,1	25,4
UC212-39	1,4	**61,913**	***2 7/16***	110	27	27,6	65,1	25,4
UC213-40	1,79	**63,5**	***2 1/2***	120	28	29,4	65,1	25,4
UC213	1,72	**65**	–	120	28	29,4	65,1	25,4
UC213-41	1,71	**65,088**	***2 9/16***	120	28	29,4	65,1	25,4
UC214-42	2,17	**66,675**	***2 5/8***	125	30	31,4	74,6	30,2
UC214-43	2,07	**68,263**	***2 11/16***	125	30	31,4	74,6	30,2
UC214-44	1,97	**69,85**	***2 3/4***	125	30	31,4	74,6	30,2
UC214	1,96	**70**	–	125	30	31,4	74,6	30,2
UC215-45	2,39	**71,438**	***2 13/16***	130	32	33,4	77,8	33,3
UC215-46	2,28	**73,025**	***2 7/8***	130	32	33,4	77,8	33,3
UC215-47	2,17	**74,613**	***2 15/16***	130	32	33,4	77,8	33,3
UC215	2,14	**75**	–	130	32	33,4	77,8	33,3
UC215-48	2,06	**76,2**	***3***	130	32	33,4	77,8	33,3
UC216-49	2,88	**77,788**	***3 1/16***	140	33	34,4	82,6	33,3
UC216-50	2,76	**79,375**	***3 1/8***	140	33	34,4	82,6	33,3
UC216	2,71	**80**	–	140	33	34,4	82,6	33,3
UC216-51	2,63	**80,963**	***3 3/16***	140	33	34,4	82,6	33,3
UC217-52	3,62	**82,55**	***3 1/4***	150	35	36,4	85,7	34,1
UC217-53	3,48	**84,138**	***3 5/16***	150	35	36,4	85,7	34,1
UC217	3,41	**85**	–	150	35	36,4	85,7	34,1
UC217-55	3,2	**87,313**	***3 7/16***	150	35	36,4	85,7	34,1
UC218-56	4,2	**88,9**	***3 1/2***	160	38	39,4	96	39,7
UC218	4,08	**90**	–	160	38	39,4	96	39,7

			Width across flats		Basic load ratings		Fatigue limit load	Factor
d_1	C_a	A	W		dyn. C_r	stat. C_{0r}	C_{ur}	f_0
			mm	inch	N	N	N	
69,77	7	10	–	3/16	46 000	29 000	1 480	14,3
69,77	7	10	–	3/16	46 000	29 000	1 480	14,3
69,77	7	10	–	3/16	46 000	29 000	1 480	14,3
69,77	7	10	5	–	46 000	29 000	1 480	14,3
69,77	7	10	–	3/16	46 000	29 000	1 480	14,3
76,48	7,4	10	–	3/16	56 000	36 000	1 820	14,3
76,48	7,4	10	–	3/16	56 000	36 000	1 820	14,3
76,48	7,4	10	5	–	56 000	36 000	1 820	14,3
76,48	7,4	10	–	3/16	56 000	36 000	1 820	14,3
76,48	7,4	10	–	3/16	56 000	36 000	1 820	14,3
80,85	8,2	12	–	1/4	61 000	40 000	2 030	14,3
80,85	8,2	12	6	–	61 000	40 000	2 030	14,3
80,85	8,2	12	–	1/4	61 000	40 000	2 030	14,3
85,2	8,5	12	–	1/4	66 000	44 000	2 230	14,4
85,2	8,5	12	–	1/4	66 000	44 000	2 230	14,4
85,2	8,5	12	–	1/4	66 000	44 000	2 230	14,4
85,2	8,5	12	6	–	66 000	44 000	2 230	14,4
90	8,5	12	–	1/4	66 000	44 500	2 240	14,7
90	8,5	12	–	1/4	66 000	44 500	2 240	14,7
90	8,5	12	–	1/4	66 000	44 500	2 240	14,7
90	8,5	12	6	–	66 000	44 500	2 240	14,7
90	8,5	12	–	1/4	66 000	44 500	2 240	14,7
97	9,3	14	–	1/4	76 000	54 000	2 600	14,6
97	9,3	14	–	1/4	76 000	54 000	2 600	14,6
97	9,3	14	6	–	76 000	54 000	2 600	14,6
97	9,3	14	–	1/4	76 000	54 000	2 600	14,6
104,09	10	14	–	1/4	88 000	64 000	2 950	14,7
104,09	10	14	–	1/4	88 000	64 000	2 950	14,7
104,09	10	14	6	–	88 000	64 000	2 950	14,7
104,09	10	14	–	1/4	88 000	64 000	2 950	14,7
109,4	11	15	–	1/4	102 000	72 000	3 250	14,5
109,4	11	15	6	–	102 000	72 000	3 250	14,5

Radial insert ball bearings with adapter sleeve

Spherical outer ring

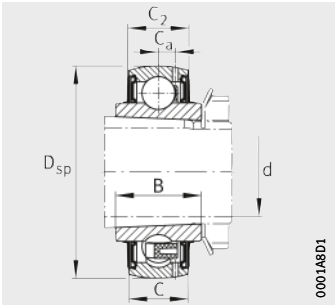

UK

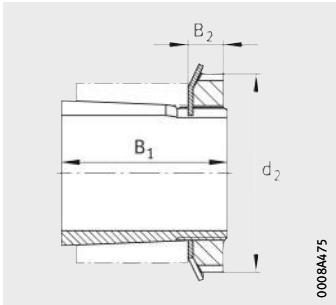

Complete adapter sleeve[1)]

Dimension table · Dimensions in mm

Designation	Mass	Dimensions						Basic load ratings		Fatigue limit load	Factor
	m	d	D_{sp}	C	C_2	B	C_a	dyn. C_r	stat. C_{0r}	C_{ur}	f_0
	≈ kg							N	N	N	
UK205	0,25	**20**	52	17	17,6	23	4,2	14 900	7 800	395	13,8
UK206	0,37	**25**	62	19	19,6	26	5	20 700	11 300	570	13,8
UK207	0,54	**30**	72	20	20,6	29	5,7	27 500	15 300	770	13,8
UK208	0,7	**35**	80	21	21,6	31	6,2	34 500	19 800	1 010	14
UK209	0,83	**40**	85	22	22,6	32	6,3	34 500	20 400	1 030	14,3
UK210	0,98	**45**	90	24	24,6	34	6,5	37 500	23 200	1 180	14,3
UK211	1,24	**50**	100	25	25,6	36	7	46 000	29 000	1 480	14,3
UK212	1,58	**55**	110	27	27,6	40	7,4	56 000	36 000	1 820	14,3
UK213	1,88	**60**	120	28	29,4	41	8,2	61 000	40 000	2 030	14,3
UK215	2,62	**65**	130	32	33,4	44,5	8,5	66 000	44 500	2 240	14,7
UK216	3,23	**70**	140	33	34,4	46	9,3	76 000	54 000	2 600	14,6
UK217	3,9	**75**	150	35	36,4	48	10	88 000	64 000	2 950	14,7
UK218	4,62	**80**	160	38	39,4	51	11	102 000	72 000	3 250	14,5

[1)] Radial insert ball bearings UK are supplied with an adapter sleeve H..X.

Designation					Mass	Dimensions		
Complete adapter sleeve	Sleeve	Locknut	Tab washer	Matching bearing	m	B_1	B_2	d_2
					≈ kg			max.
H2305X	A2305X	AN05	AW05X	UK205	0,1	35	8	38
H2306X	A2306X	AN06	AW06X	UK206	0,13	38	8	45
H2307X	A2307X	AN07	AW07X	UK207	0,18	43	9	52
H2308X	A2308X	AN08	AW08X	UK208	0,23	46	10	58
H2309X	A2309X	AN09	AW09X	UK209	0,31	50	11	65
H2310X	A2310X	AN10	AW10X	UK210	0,38	55	12	70
H2311X	A2311X	AN11	AW11X	UK211	0,45	59	12	75
H2312X	A2312X	AN12	AW12X	UK212	0,5	62	13	80
H2313X	A2313X	AN13	AW13X	UK213	0,58	65	14	85
H2315X	A2315X	AN15	AW15X	UK215	1,1	73	15	98
H2316X	A2316X	AN16	AW16X	UK216	1,33	78	17	105
H2317X	A2317X	AN17	AW17X	UK217	1,51	82	18	110
H2318X	A2318X	AN18	AW18X	UK218	1,77	86	18	120

Housing units

Housing units

Page

Matrix

Possible combinations of radial insert ball bearings and housings 24

Product overview

Housing units 26

Features

Housing units with flake graphite cast iron housing 28

Operating temperature 30

Design and safety guidelines

Compensation of static misalignments 31

Load carrying capacity of housings 31

Load carrying capacity and speed limits of radial insert ball bearings 31

Design of adjacent construction 31

Mounting and dismounting 32

Accuracy

Dimensional tolerances 35

Dimension tables

Plummer block housing units, flake graphite cast iron housing with long base
- with grub screws in inner ring 36
- with adapter sleeve 42

Plummer block housing units, flake graphite cast iron housing with short base
- with grub screws in inner ring 44

Two-bolt flanged housing units, oval version
- with grub screws in inner ring 48
- with adapter sleeve 54

Four-bolt flanged housing units, square version
- with grub screws in inner ring 56
- with adapter sleeve 62

Four-bolt flanged housing units, round version
- with grub screws in inner ring 64
- with adapter sleeve 70

Take-up housing units, for linear motion
- with grub screws in inner ring 72
- with adapter sleeve 78

Take-up housing units, for swivel motion
- with grub screws in inner ring 80

Possible combinations of radial insert ball bearings and housings

Radial insert ball bearing		Housing	
		Plummer block housing	
		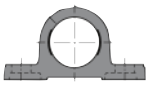	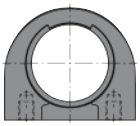
Designation Shaft diameter d		**P**	**PA**
UC 12 mm – 90 mm *1/2″ – 3 1/2″*	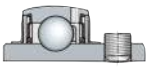	**UCP** page 36	**UCPA** page 44
UK 20 mm – 80 mm	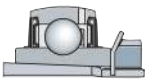	**UKP** page 42	Available by agreement

Catalogue range, for dimension tables see pages indicated.
Other dimensions and combinations available by agreement.

	Two-bolt flanged housing	Four-bolt flanged housing		Take-up housing	
	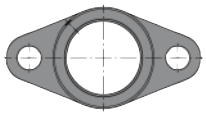	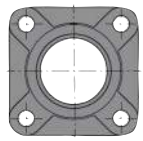	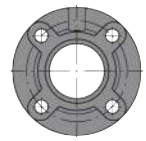	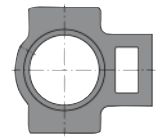	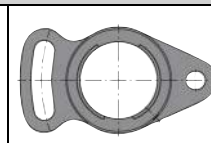
	FL	**F**	**FC**	**T**	**FA**
	UCFL page 48	**UCF** page 56	**UCFC** page 64	**UCT** page 72	**UCFA** page 80
	UKFL page 54	**UKF** page 62	**UKFC** page 70	**UKT** page 78	Available by agreement

Plummer block housing units

Flake graphite cast iron housing with long base

UCP

UKP

Flake graphite cast iron housing with short base

UCPA

Two-bolt flanged housing units

Flake graphite cast iron housing

UCFL

UKFL

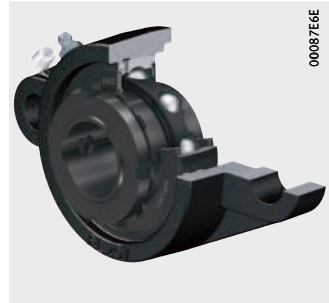

Four-bolt flanged housing units

Flake graphite cast iron housing

UCF

UKF

UCFC

UKFC

Take-up housing units

Flake graphite cast iron housing

UCT

UKT

UCFA

Housing units

Features

These housing units are available as plummer block housing units, flanged housing units and take-up housing units. The units are ready-to-fit and comprise FAG flake graphite cast iron housings in which FAG Black Series radial insert ball bearings are fitted.

Due to the spherical outer ring of the bearing and the concave housing bore, housing units can compensate for static misalignments of the shaft, see page 31.

The housings are screw mounted on the adjacent construction. Less stringent tolerances are sufficient for the screw mounting surfaces, see page 31.

Housing units with flake graphite cast iron housing

The flake graphite cast iron housings are single piece components in accordance with JIS B 1559 and have high radial and axial load carrying capacity, see page 31.

The housing has a lubrication groove for relubrication of the radial insert ball bearing. The housing has a lubrication hole with an M6 thread for a lubrication nipple.

The housings have a primer paint coating as anti-corrosion protection of colour RAL 9005 (black).

In order to ensure function and reliability under all operating conditions, the bearings and housings are matched to each other with a defined swivel moment after mounting.

All catalogue cast iron units have a mean swivel moment (as standard); further designs with a smaller or greater swivel moment, depending on their application, are available by agreement.

Housing material

The material used for the flake graphite cast iron housings is cast iron in accordance with JIS G 5501.

Plummer block housing units

Plummer block housing units have a housing with a short or long base and are screw mounted to the adjacent construction through slot holes or fixing holes, *Figure 1* and *Figure 2*, page 29.

Plummer block housing units with a long base are available either with radial insert ball bearings UC with grub screws or with radial insert ball bearings UK with adapter sleeves, see dimension table.

UCP

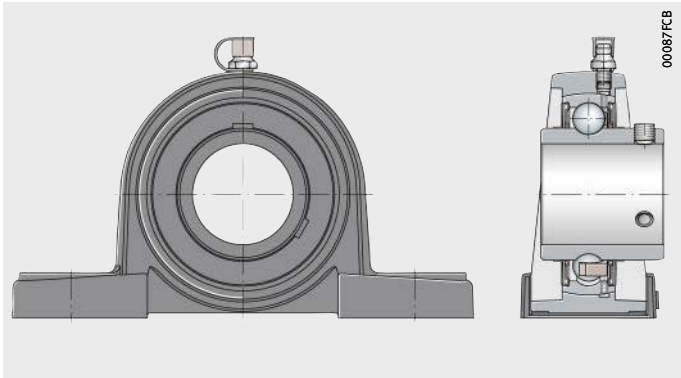

Figure 1
Plummer block housing unit, flake graphite cast iron housing with long base

UCPA

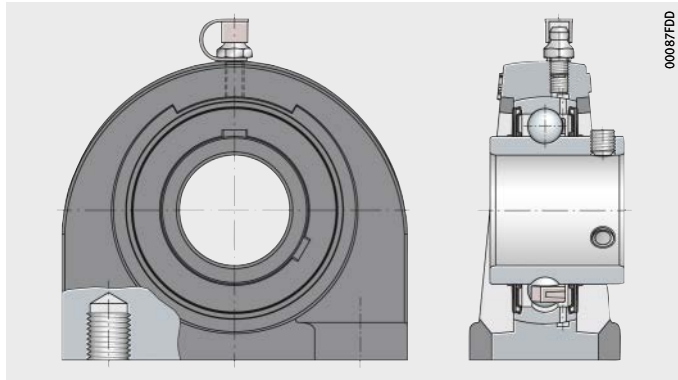

Figure 2
Plummer block housing unit with short base

Flanged housing units

Flanged housing units are available as two-bolt and four-bolt units, *Figure 3* to *Figure 5*, page 30. The housings are oval, square or round in shape. The housings have through holes for location purposes.

Flanged housing units are available either with radial insert ball bearings UC with grub screws or with radial insert ball bearings UK with adapter sleeves, see dimension table.

UCFL

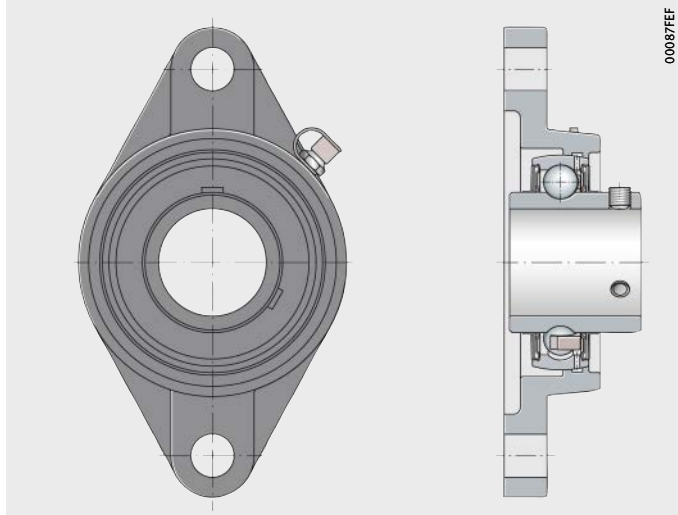

Figure 3
Two-bolt flanged housing unit, oval version

UCF

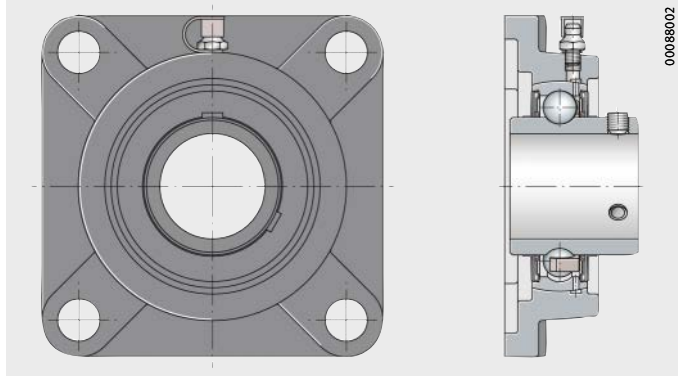

Figure 4
Four-bolt flanged housing unit, square version

UCFC

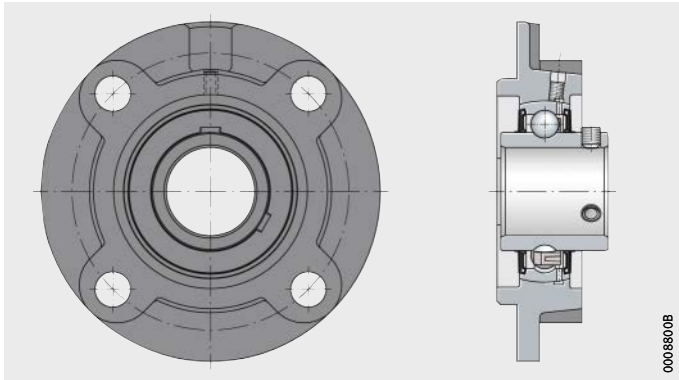

Figure 5
Four-bolt flanged housing unit, round version

Take-up housing units

Take-up housing units can be moved or swivelled, *Figure 6* and *Figure 7*. They are used where shafts must carry out long displacement motions.

UCT

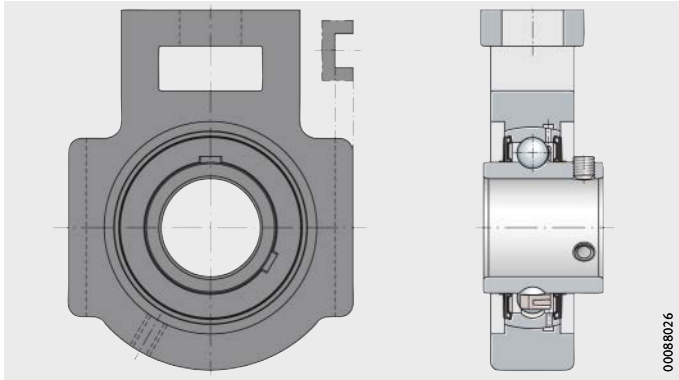

Figure 6
Take-up housing unit for linear motion

UCFA

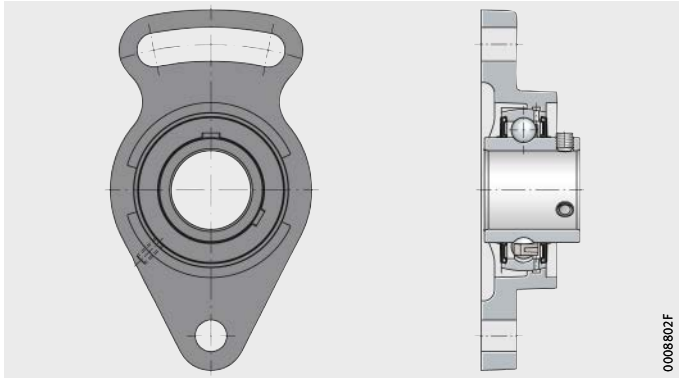

Figure 7
Take-up housing unit for swivel motion

Operating temperature

Housing units are suitable for operating temperatures of –20 °C to +100 °C. Temperature peaks of up to +120 °C are possible for short periods.

Design and safety guidelines

Compensation of static misalignments

Units with a spherical outer ring and concave housing bore can compensate static misalignments of the shaft, see page 11.

Load carrying capacity of housings

Due to their versatile characteristics, FAG housing units can be easily used in almost all industrial sectors.

Radial load carrying capacity

Flake graphite cast iron housings can support the same radial loads as the radial insert ball bearings fitted. The static load carrying capacity C_{0r} of the radial insert ball bearings is stated in the dimension tables.

Where shock loads are present, appropriate safety factors must be applied. In this case, please contact us.

Axial load carrying capacity

The axial load carrying capacity of flake graphite cast iron housings is restricted to $0{,}5 \times C_{0r}$.

Load carrying capacity and speed limits of radial insert ball bearings

In the design of housing units, attention must be paid to the load carrying capacity and speed limits of the radial insert ball bearings fitted:

- speed limits, see page 12
- dimension table, see page 16.

Design of adjacent construction

The permissible shaft tolerance is dependent on the speed and load. Shafts of the tolerance classes h6 Ⓔ to h9 Ⓔ can be used.

Screw mounting surfaces

Recommendations for the screw mounting surfaces are as follows:

- roughness of the screw mounting surface max. Ra 12,5 (Rzmax 63)
- geometrical and positional tolerance 0,04/100 concave, spherical not permissible.
- In the event of high loads occurring parallel to the mounting surface of plummer block housing units (in the case of cast iron housing with long base), the use of additional dowel pins to DIN EN ISO 8752 is recommended. In this case, through holes (see centre punch mark for housing ASE) must be applied, see *Figure 8*, page 33.

Fixing screws

The screw connection should be designed in accordance with the state of the art; friction coefficient μ = 0,12 (90%).

Screws of grade 8.8 or better can be used for fixing.
The maximum tightening torques applicable to this screw grade must not be exceeded even if screws of a higher grade are used.

In principle, we recommend that the screw connection should only be tightened to 70% of the values stated in the standard.

For fixing, hexagonal socket head screws in accordance with DIN EN ISO 4762 or hexagonal socket head screws with a coarse pitch full thread in accordance with DIN EN ISO 4017 should be used. The screws should be combined as a minimum with a washer in accordance with DIN EN ISO 7089 or DIN EN ISO 7090.

Screws and accessories for location are not included in the delivery.

Mounting and dismounting

Radial insert ball bearings must be handled with care before and during mounting. Their trouble-free operation is also dependent on the care taken during mounting.

Delivered condition

The housings have a coating of black primer paint (RAL 9005).

The radial insert ball bearings are greased using a grease in grease group GA13, see Catalogue HR 1, Rolling Bearings.

The housing units are supplied with a loose packed lubrication nipple and integrated end cap for the lubrication nipple as well as an Allen key.

Storage and shelf life

The units should be stored in dry, clean rooms with a temperature as constant as possible and at a relative humidity of max. 65%.

The storage life of radial insert ball bearings is limited by the shelf life of the grease, see chapter Technical principles in Catalogue HR 1, Rolling Bearings.

Removal from packaging

Perspiration causes corrosion. Hands must therefore be kept clean and dry. Bearings should not be removed from their original packaging until immediately before mounting.

Preparation for mounting

The following preparatory measures for mounting should be taken:

- Ensure that the mounting tools and fixing screws are present.
- Clean the shaft and remove any burrs.
- Inspect the bearing seating surfaces on the shaft.
- Keep bearing seating surfaces clean, dry and free of grease.

Mounting of plummer block and flanged housing units

The assembly area should be as dry and clean as possible:

- The specified shaft tolerances must be observed, see page 31.
- Mounting forces must never be directed through the rolling elements.
- Blows should never be applied directly to the bearing rings and flinger shields or seals.
- Observe the tightening torques M_A for grub screws and adapter sleeve, see tables, page 34.

If the following sequence is observed, the bearing will align itself on the shaft in such a way that no undesirable stresses occur:

▶ Slide the housing unit onto the shaft and align it with the fixing holes in the adjacent construction, *Figure 8*.

▶ Fit dowel pins if necessary.

▶ Tighten the fixing screws for all housings finger tight in the adjacent construction as far as possible and align the shaft, *Figure 9*, page 34.

▶ Tighten both grub screws in the inner ring (for radial insert ball bearing UC) or the locknut of the adapter sleeve (for radial insert ball bearing UK) using a tightening torque (with an additional adapter if necessary) to the specified tightening torque, *Figure 10*, page 34.

▶ Locate the housings on the adjacent construction using the recommended tightening torque, see page 31.

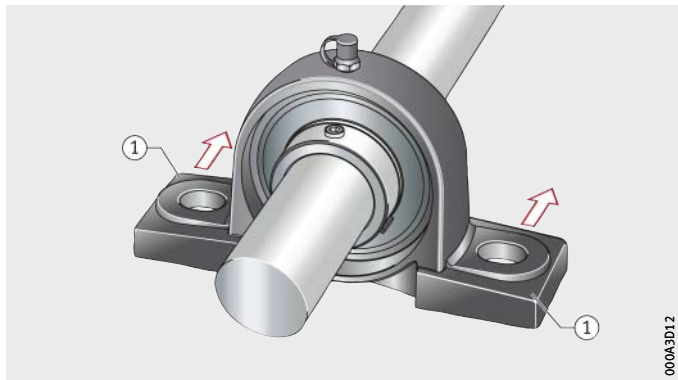

① Position of additional through hole for location of dowel pins in accordance with DIN EN ISO 8752 (in the event of high loads occurring parallel to the mounting surface; for housing P)

Figure 8
Sliding the unit onto the shaft

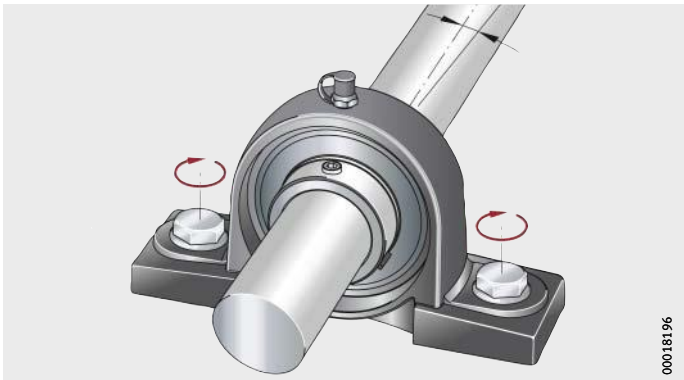

Figure 9
Screw mounting
the housing finger tight

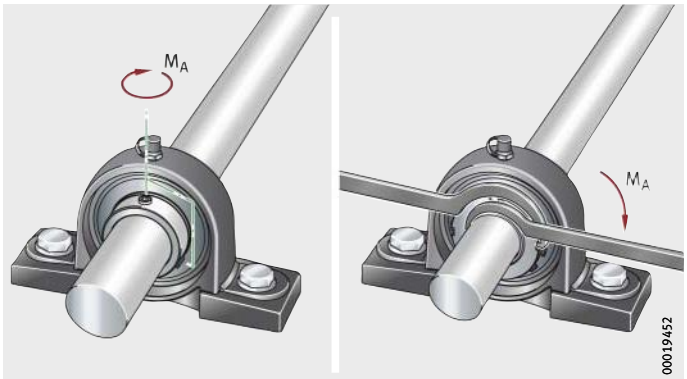

Figure 10
Fully tightening the grub screws or
locknut in the inner ring

Tightening torques for grub screws

Width across flats W		Thread		Tightening torque[1] M_A
mm	inch	ISO	UNF	Nm
3	1/8	M6×0,75	1/4″-28	6
4	5/32	M8×1	5/16″-24	14
5	3/16	M10×1,25	3/8″-24	26
6	1/4	M12×1,5	1/2″-20	42

[1] The tightening torques are valid for original FAG grub screws only.

Tightening torques for locknut

Locknut	Tightening torque M_A Nm
AN05	25
AN06	30
AN07	40
AN08	50
AN09	60
AN10	75
AN11	100
AN12	130
AN13	150
AN15	170
AN16	200
AN17	230
AN18	270

Dismounting

The units are dismounted in the reverse sequence.

- ▶ Loosen the grub screws in the inner ring or the locknut of the adapter sleeve.
- ▶ Unscrew the housing.

Accuracy

The flake graphite cast iron housings conform to JIS B 1559.

Accuracy of fitted radial insert ball bearings: see page 13.

Dimensional tolerances

The dimensional tolerances for the machined surfaces of the flake graphite cast iron housings are ±0,25 mm.

Dimensions without tolerance conform to JIS B 0403:

- unfinished dimensions to Table 1, class CT 10
- finished dimensions to Table 5.

Plummer block housing units

Flake graphite cast iron housing
with long base
With grub screws in inner ring

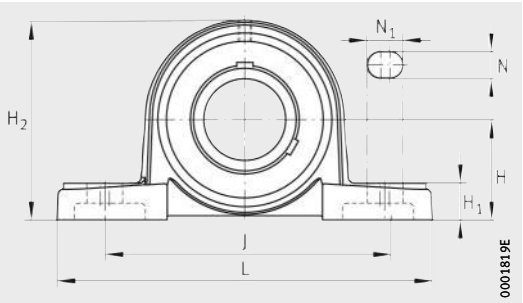

UCP

Dimension table · Dimensions in mm and inch

Designation			Mass	Dimensions					
Unit	Housing	Radial insert ball bearing	m	d		H	J	L	A
			≈ kg	mm	inch				
UCP201	P203	UC201	0,7	**12**	–	30,2	95	127	38
UCP201-08	P203	UC201-08	0,69	**12,7**	1/2	30,2	95	127	38
UCP202-09	P203	UC202-09	0,69	**14,288**	9/16	30,2	95	127	38
UCP202	P203	UC202	0,68	**15**	–	30,2	95	127	38
UCP202-10	P203	UC202-10	0,68	**15,875**	5/8	30,2	95	127	38
UCP203	P203	UC203	0,67	**17**	–	30,2	95	127	38
UCP203-11	P203	UC203-11	0,67	**17,463**	11/16	30,2	95	127	38
UCP204-12	P204	UC204-12	0,66	**19,05**	3/4	33,3	95	127	38
UCP204	P204	UC204	0,65	**20**	–	33,3	95	127	38
UCP205-13	P205	UC205-13	0,83	**20,638**	13/16	36,5	105	140	38
UCP205-14	P205	UC205-14	0,82	**22,225**	7/8	36,5	105	140	38
UCP205-15	P205	UC205-15	0,81	**23,813**	15/16	36,5	105	140	38
UCP205	P205	UC205	0,79	**25**	–	36,5	105	140	38
UCP205-16	P205	UC205-16	0,79	**25,4**	1	36,5	105	140	38
UCP206-17	P206	UC206-17	1,33	**26,988**	1 1/16	42,9	121	165	48
UCP206-18	P206	UC206-18	1,31	**28,575**	1 1/8	42,9	121	165	48
UCP206	P206	UC206	1,29	**30**	–	42,9	121	165	48
UCP206-19	P206	UC206-19	1,29	**30,163**	1 3/16	42,9	121	165	48
UCP206-20	P206	UC206-20	1,27	**31,75**	1 1/4	42,9	121	165	48
UCP207-20	P207	UC207-20	1,6	**31,75**	1 1/4	47,6	127	167	48
UCP207-21	P207	UC207-21	1,58	**33,338**	1 5/16	47,6	127	167	48
UCP207-22	P207	UC207-22	1,55	**34,925**	1 3/8	47,6	127	167	48
UCP207	P207	UC207	1,55	**35**	–	47,6	127	167	48
UCP207-23	P207	UC207-23	1,52	**36,513**	1 7/16	47,6	127	167	48
UCP208-24	P208	UC208-24	1,89	**38,1**	1 1/2	49,2	137	184	54
UCP208-25	P208	UC208-25	1,85	**39,688**	1 9/16	49,2	137	184	54
UCP208	P208	UC208	1,84	**40**	–	49,2	137	184	54

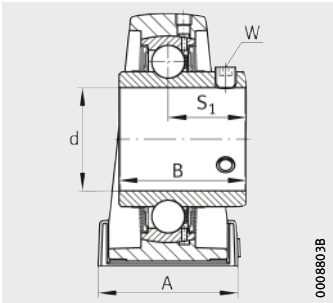

UCP

						Width across flats		Load carrying capacity Bearing		
								Basic load ratings		Fatigue limit load
H_1	H_2	N	N_1	B	S_1	W		dyn. C_r	stat. C_{0r}	C_{ur}
						mm	inch	N	N	N
14	62	13	19	31	18,3	3	–	13 600	6 600	335
14	62	13	19	31	18,3	–	1/8	13 600	6 600	335
14	62	13	19	31	18,3	–	1/8	13 600	6 600	335
14	62	13	19	31	18,3	3	–	13 600	6 600	335
14	62	13	19	31	18,3	–	1/8	13 600	6 600	335
14	62	13	19	31	18,3	3	–	13 600	6 600	335
14	62	13	19	31	18,3	–	1/8	13 600	6 600	335
14	65	13	19	31	18,3	–	1/8	13 600	6 600	335
14	65	13	19	31	18,3	3	–	13 600	6 600	335
15	71	13	19	34,1	19,8	–	1/8	14 900	7 800	395
15	71	13	19	34,1	19,8	–	1/8	14 900	7 800	395
15	71	13	19	34,1	19,8	–	1/8	14 900	7 800	395
15	71	13	19	34,1	19,8	3	–	14 900	7 800	395
15	71	13	19	34,1	19,8	–	1/8	14 900	7 800	395
17	83	17	21	38,1	22,2	–	1/8	20 700	11 300	570
17	83	17	21	38,1	22,2	–	1/8	20 700	11 300	570
17	83	17	21	38,1	22,2	3	–	20 700	11 300	570
17	83	17	21	38,1	22,2	–	1/8	20 700	11 300	570
17	83	17	21	38,1	22,2	–	1/8	20 700	11 300	570
18	93	17	21	42,9	25,4	–	5/32	27 500	15 300	770
18	93	17	21	42,9	25,4	–	5/32	27 500	15 300	770
18	93	17	21	42,9	25,4	–	5/32	27 500	15 300	770
18	93	17	21	42,9	25,4	4	–	27 500	15 300	770
18	93	17	21	42,9	25,4	–	5/32	27 500	15 300	770
18	98	17	21	49,2	30,2	–	5/32	34 500	19 800	1 010
18	98	17	21	49,2	30,2	–	5/32	34 500	19 800	1 010
18	98	17	21	49,2	30,2	4	–	34 500	19 800	1 010

Plummer block housing units

Flake graphite cast iron housing
with long base
With grub screws in inner ring

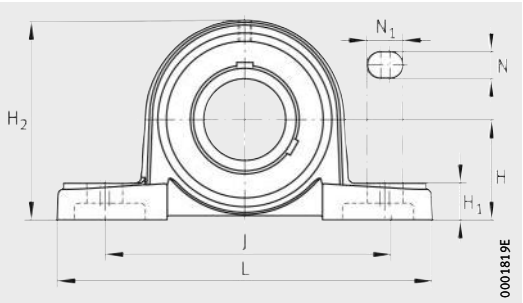

UCP

Dimension table (continued) · Dimensions in mm and inch

Designation			Mass	Dimensions					
Unit	Housing	Radial insert ball bearing	m	d		H	J	L	A
			≈ kg	mm	inch				
UCP209-26	P209	UC209-26	2,29	**41,275**	***1 5/8***	54	146	190	54
UCP209-27	P209	UC209-27	2,25	**42,863**	***1 11/16***	54	146	190	54
UCP209-28	P209	UC209-28	2,21	**44,45**	***1 3/4***	54	146	190	54
UCP209	P209	UC209	2,2	**45**	–	54	146	190	54
UCP210-29	P210	UC210-29	2,89	**46,038**	***1 13/16***	57,2	159	206	60
UCP210-30	P210	UC210-30	2,85	**47,625**	***1 7/8***	57,2	159	206	60
UCP210-31	P210	UC210-31	2,8	**49,213**	***1 15/16***	57,2	159	206	60
UCP210	P210	UC210	2,77	**50**	–	57,2	159	206	60
UCP210-32	P210	UC210-32	2,75	**50,8**	***2***	57,2	159	206	60
UCP211-32	P211	UC211-32	3,56	**50,8**	***2***	63,5	171	219	60
UCP211-33	P211	UC211-33	3,5	**52,388**	***2 1/16***	63,5	171	219	60
UCP211-34	P211	UC211-34	3,44	**53,975**	***2 1/8***	63,5	171	219	60
UCP211	P211	UC211	3,41	**55**	–	63,5	171	219	60
UCP211-35	P211	UC211-35	3,39	**55,563**	***2 3/16***	63,5	171	219	60
UCP212-36	P212	UC212-36	4,75	**57,15**	***2 1/4***	69,8	184	241	70
UCP212-37	P212	UC212-37	4,68	**58,738**	***2 5/16***	69,8	184	241	70
UCP212	P212	UC212	4,62	**60**	–	69,8	184	241	70
UCP212-38	P212	UC212-38	4,6	**60,325**	***2 3/8***	69,8	184	241	70
UCP212-39	P212	UC212-39	4,53	**61,913**	***2 7/16***	69,8	184	241	70
UCP213-40	P213	UC213-40	5,63	**63,5**	***2 1/2***	76,2	203	265	70
UCP213	P213	UC213	5,55	**65**	–	76,2	203	265	70
UCP213-41	P213	UC213-41	5,55	**65,088**	***2 9/16***	76,2	203	265	70
UCP214-42	P214	UC214-42	6,29	**66,675**	***2 5/8***	79,4	210	266	72
UCP214-43	P214	UC214-43	6,2	**68,263**	***2 11/16***	79,4	210	266	72
UCP214-44	P214	UC214-44	6,1	**69,85**	***2 3/4***	79,4	210	266	72
UCP214	P214	UC214	6,1	**70**	–	79,4	210	266	72

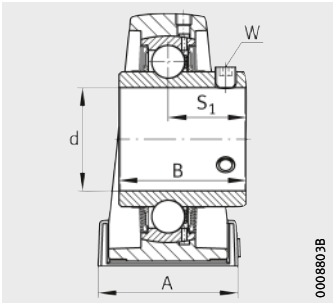

UCP

						Width across flats		Load carrying capacity Bearing		
								Basic load ratings		Fatigue limit load
H_1	H_2	N	N_1	B	S_1	W		dyn. C_r	stat. C_{0r}	C_{ur}
						mm	inch	N	N	N
20	106	17	21	49,2	30,2	–	5/32	34 500	20 400	1 030
20	106	17	21	49,2	30,2	–	5/32	34 500	20 400	1 030
20	106	17	21	49,2	30,2	–	5/32	34 500	20 400	1 030
20	106	17	21	49,2	30,2	4	–	34 500	20 400	1 030
21	114	20	25	51,6	32,6	–	3/16	37 500	23 200	1 180
21	114	20	25	51,6	32,6	–	3/16	37 500	23 200	1 180
21	114	20	25	51,6	32,6	–	3/16	37 500	23 200	1 180
21	114	20	25	51,6	32,6	5	–	37 500	23 200	1 180
21	114	20	25	51,6	32,6	–	3/16	37 500	23 200	1 180
23	126	20	25	55,6	33,4	–	3/16	46 000	29 000	1 480
23	126	20	25	55,6	33,4	–	3/16	46 000	29 000	1 480
23	126	20	25	55,6	33,4	–	3/16	46 000	29 000	1 480
23	126	20	25	55,6	33,4	5	–	46 000	29 000	1 480
23	126	20	25	55,6	33,4	–	3/16	46 000	29 000	1 480
25	138	20	25	65,1	39,7	–	3/16	56 000	36 000	1 820
25	138	20	25	65,1	39,7	–	3/16	56 000	36 000	1 820
25	138	20	25	65,1	39,7	5	–	56 000	36 000	1 820
25	138	20	25	65,1	39,7	–	3/16	56 000	36 000	1 820
25	138	20	25	65,1	39,7	–	3/16	56 000	36 000	1 820
27	151	25	29	65,1	39,7	–	1/4	61 000	40 000	2 030
27	151	25	29	65,1	39,7	6	–	61 000	40 000	2 030
27	151	25	29	65,1	39,7	–	1/4	61 000	40 000	2 030
27	157	25	31	74,6	44,4	–	1/4	66 000	44 000	2 230
27	157	25	31	74,6	44,4	–	1/4	66 000	44 000	2 230
27	157	25	31	74,6	44,4	–	1/4	66 000	44 000	2 230
27	157	25	31	74,6	44,4	6	–	66 000	44 000	2 230

Plummer block housing units

Flake graphite cast iron housing
with long base
With grub screws in inner ring

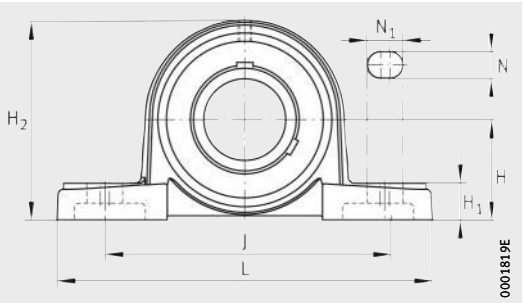

UCP

Dimension table (continued) · Dimensions in mm and inch

Designation			Mass	Dimensions					
Unit	Housing	Radial insert ball bearing	m	d		H	J	L	A
			≈ kg	mm	inch				
UCP215-45	P215	UC215-45	6,9	**71,438**	$2^{13}/_{16}$	82,6	217	275	74
UCP215-46	P215	UC215-46	6,81	**73,025**	$2^{7}/_{8}$	82,6	217	275	74
UCP215-47	P215	UC215-47	6,7	**74,613**	$2^{15}/_{16}$	82,6	217	275	74
UCP215	P215	UC215	6,67	**75**	–	82,6	217	275	74
UCP215-48	P215	UC215-48	6,58	**76,2**	**3**	82,6	217	275	74
UCP216-49	P216	UC216-49	8,53	**77,788**	$3^{1}/_{16}$	88,9	232	292	78
UCP216-50	P216	UC216-50	8,4	**79,375**	$3^{1}/_{8}$	88,9	232	292	78
UCP216	P216	UC216	8,4	**80**	–	88,9	232	292	78
UCP216-51	P216	UC216-51	8,28	**80,963**	$3^{3}/_{16}$	88,9	232	292	78
UCP217-52	P217	UC217-52	10,3	**82,55**	$3^{1}/_{4}$	95,2	247	310	83
UCP217-53	P217	UC217-53	10,17	**84,138**	$3^{5}/_{16}$	95,2	247	310	83
UCP217	P217	UC217	10,1	**85**	–	95,2	247	310	83
UCP217-55	P217	UC217-55	9,9	**87,313**	$3^{7}/_{16}$	95,2	247	310	83
UCP218-56	P218	UC218-56	12,3	**88,9**	$3^{1}/_{2}$	101,6	262	327	88
UCP218	P218	UC218	12,2	**90**	–	101,6	262	327	88

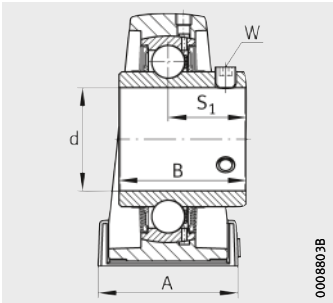

UCP

						Width across flats		Load carrying capacity Bearing		
								Basic load ratings		Fatigue limit load
H_1	H_2	N	N_1	B	S_1	W		dyn. C_r	stat. C_{0r}	C_{ur}
						mm	inch	N	N	N
28	163	25	31	77,8	44,5	–	1/4	66 000	44 500	2 240
28	163	25	31	77,8	44,5	–	1/4	66 000	44 500	2 240
28	163	25	31	77,8	44,5	–	1/4	66 000	44 500	2 240
28	163	25	31	77,8	44,5	6	–	66 000	44 500	2 240
28	163	25	31	77,8	44,5	–	1/4	66 000	44 500	2 240
30	175	25	31	82,6	49,3	–	1/4	76 000	54 000	2 600
30	175	25	31	82,6	49,3	–	1/4	76 000	54 000	2 600
30	175	25	31	82,6	49,3	6	–	76 000	54 000	2 600
30	175	25	31	82,6	49,3	–	1/4	76 000	54 000	2 600
32	187	25	31	85,7	51,6	–	1/4	88 000	64 000	2 950
32	187	25	31	85,7	51,6	–	1/4	88 000	64 000	2 950
32	187	25	31	85,7	51,6	6	–	88 000	64 000	2 950
32	187	25	31	85,7	51,6	–	1/4	88 000	64 000	2 950
33	200	27	33	96	56,3	–	1/4	102 000	72 000	3 250
33	200	27	33	96	56,3	6	–	102 000	72 000	3 250

Plummer block housing units

Flake graphite cast iron housing
with long base
With adapter sleeve

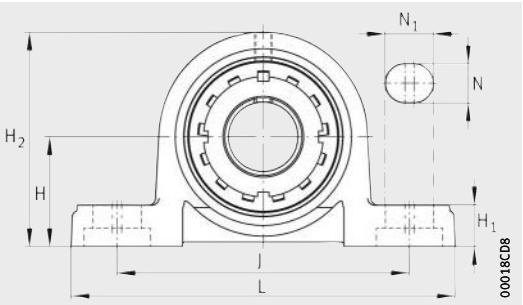

UKP

Dimension table · Dimensions in mm

Designation			Mass	Dimensions				
Unit	Housing	Radial insert ball bearing	m ≈ kg	d	H	J	L	A
UKP205	P205	UK205	0,84	**20**	36,5	105	140	38
UKP206	P206	UK206	1,36	**25**	42,9	121	165	48
UKP207	P207	UK207	1,63	**30**	47,6	127	167	48
UKP208	P208	UK208	1,92	**35**	49,2	137	184	54
UKP209	P209	UK209	2,33	**40**	54	146	190	54
UKP210	P210	UK210	2,95	**45**	57,2	159	206	60
UKP211	P211	UK211	3,58	**50**	63,5	171	219	60
UKP212	P212	UK212	4,71	**55**	69,8	184	241	70
UKP213	P213	UK213	5,71	**60**	76,2	203	265	70
UKP215	P215	UK215	7,11	**65**	82,6	217	275	74
UKP216	P216	UK216	8,86	**70**	88,9	232	292	78
UKP217	P217	UK217	10,58	**75**	95,2	247	310	83
UKP218	P218	UK218	12,71	**80**	101,6	262	327	88

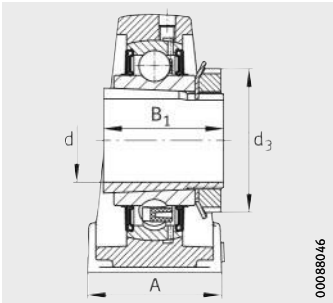

UKP

						Load carrying capacity Bearing		
						Basic load ratings		Fatigue limit load
H_1	H_2	N	N_1	B_1	d_3 max.	dyn. C_r N	stat. C_{0r} N	C_{ur} N
15	71	13	19	35	38	14 900	7 800	395
17	83	17	21	38	45	20 700	11 300	570
18	93	17	21	43	52	27 500	15 300	770
18	98	17	21	46	58	34 500	19 800	1 010
20	106	17	21	50	65	34 500	20 400	1 030
21	114	20	25	55	70	37 500	23 200	1 180
23	126	20	25	59	75	46 000	29 000	1 480
25	138	20	25	62	80	56 000	36 000	1 820
27	151	25	29	65	85	61 000	40 000	2 030
28	163	25	31	73	98	66 000	44 500	2 240
30	175	25	31	78	105	76 000	54 000	2 600
32	187	25	31	82	110	88 000	64 000	2 950
33	200	27	33	86	120	102 000	72 000	3 250

Plummer block housing units

Flake graphite cast iron housing
with short base
With grub screws in inner ring

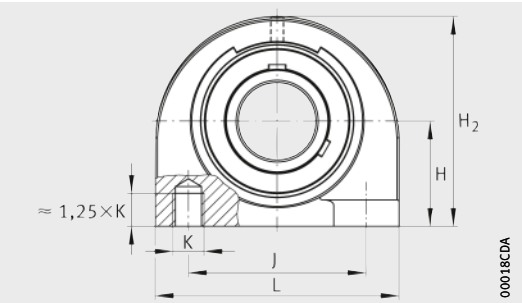

UCPA

Dimension table · Dimensions in mm and inch

Designation			Mass	Dimensions				
Unit	Housing	Radial insert ball bearing	m	d		H	J	L
			≈ kg	mm	inch			
UCPA201	PA204	UC201	0,65	**12**	–	30,2	52	76
UCPA201-08	PA204	UC201-08	0,65	**12,7**	***1/2***	30,2	52	76
UCPA202-09	PA204	UC202-09	0,64	**14,288**	***9/16***	30,2	52	76
UCPA202	PA204	UC202	0,64	**15**	–	30,2	52	76
UCPA202-10	PA204	UC202-10	0,63	**15,875**	***5/8***	30,2	52	76
UCPA203	PA204	UC203	0,63	**17**	–	30,2	52	76
UCPA203-11	PA204	UC203-11	0,63	**17,463**	***11/16***	30,2	52	76
UCPA204-12	PA204	UC204-12	0,62	**19,05**	***3/4***	30,2	52	76
UCPA204	PA204	UC204	0,61	**20**	–	30,2	52	76
UCPA205-13	PA205	UC205-13	0,87	**20,638**	***13/16***	36,5	56	84
UCPA205-14	PA205	UC205-14	0,86	**22,225**	***7/8***	36,5	56	84
UCPA205-15	PA205	UC205-15	0,84	**23,813**	***15/16***	36,5	56	84
UCPA205	PA205	UC205	0,83	**25**	–	36,5	56	84
UCPA205-16	PA205	UC205-16	0,83	**25,4**	***1***	36,5	56	84
UCPA206-17	PA206	UC206-17	1,26	**26,988**	***1 1/16***	42,9	66	94
UCPA206-18	PA206	UC206-18	1,24	**28,575**	***1 1/8***	42,9	66	94
UCPA206	PA206	UC206	1,22	**30**	–	42,9	66	94
UCPA206-19	PA206	UC206-19	1,22	**30,163**	***1 3/16***	42,9	66	94
UCPA206-20	PA206	UC206-20	1,2	**31,75**	***1 1/4***	42,9	66	94

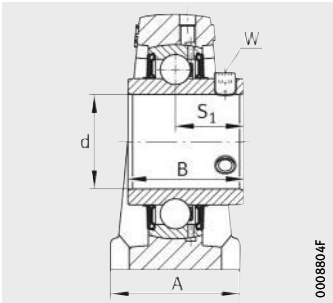

UCPA

					Width across flats		Load carrying capacity Bearing		
							Basic load ratings		Fatigue limit load
A	H_2	K	B	S_1	W		dyn. C_r	stat. C_{0r}	C_{ur}
					mm	inch	N	N	N
38	62	M10	31	18,3	3	–	13 600	6 600	335
38	62	M10	31	18,3	–	1/8	13 600	6 600	335
38	62	M10	31	18,3	–	1/8	13 600	6 600	335
38	62	M10	31	18,3	3	–	13 600	6 600	335
38	62	M10	31	18,3	–	1/8	13 600	6 600	335
38	62	M10	31	18,3	3	–	13 600	6 600	335
38	62	M10	31	18,3	–	1/8	13 600	6 600	335
38	62	M10	31	18,3	–	1/8	13 600	6 600	335
38	62	M10	31	18,3	3	–	13 600	6 600	335
38	72	M10	34,1	19,8	–	1/8	14 900	7 800	395
38	72	M10	34,1	19,8	–	1/8	14 900	7 800	395
38	72	M10	34,1	19,8	–	1/8	14 900	7 800	395
38	72	M10	34,1	19,8	3	–	14 900	7 800	395
38	72	M10	34,1	19,8	–	1/8	14 900	7 800	395
48	84	M14	38,1	22,2	–	1/8	20 700	11 300	570
48	84	M14	38,1	22,2	–	1/8	20 700	11 300	570
48	84	M14	38,1	22,2	3	–	20 700	11 300	570
48	84	M14	38,1	22,2	–	1/8	20 700	11 300	570
48	84	M14	38,1	22,2	–	1/8	20 700	11 300	570

Plummer block housing units

Flake graphite cast iron housing
with short base
With grub screws in inner ring

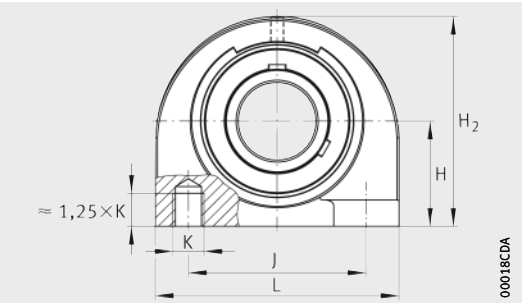

UCPA

Dimension table (continued) · Dimensions in mm and inch

Designation			Mass	Dimensions				
Unit	Housing	Radial insert ball bearing	m	d		H	J	L
			≈ kg	mm	inch			
UCPA207-20	PA207	UC207-20	1,75	**31,75**	***1 1/4***	47,6	80	110
UCPA207-21	PA207	UC207-21	1,73	**33,338**	***1 5/16***	47,6	80	110
UCPA207-22	PA207	UC207-22	1,7	**34,925**	***1 3/8***	47,6	80	110
UCPA207	PA207	UC207	1,7	**35**	–	47,6	80	110
UCPA207-23	PA207	UC207-23	1,67	**36,513**	***1 7/16***	47,6	80	110
UCPA208-24	PA208	UC208-24	1,96	**38,1**	***1 1/2***	49,2	84	116
UCPA208-25	PA208	UC208-25	1,92	**39,688**	***1 9/16***	49,2	84	116
UCPA208	PA208	UC208	1,91	**40**	–	49,2	84	116
UCPA209-26	PA209	UC209-26	2,28	**41,275**	***1 5/8***	54,2	90	120
UCPA209-27	PA209	UC209-27	2,24	**42,863**	***1 11/16***	54,2	90	120
UCPA209-28	PA209	UC209-28	2,2	**44,45**	***1 3/4***	54,2	90	120
UCPA209	PA209	UC209	2,19	**45**	–	54,2	90	120
UCPA210-29	PA210	UC210-29	2,9	**46,038**	***1 13/16***	57,2	94	130
UCPA210-30	PA210	UC210-30	2,85	**47,625**	***1 7/8***	57,2	94	130
UCPA210-31	PA210	UC210-31	2,8	**49,213**	***1 15/16***	57,2	94	130
UCPA210	PA210	UC210	2,78	**50**	–	57,2	94	130
UCPA210-32	PA210	UC210-32	2,76	**50,8**	***2***	57,2	94	130

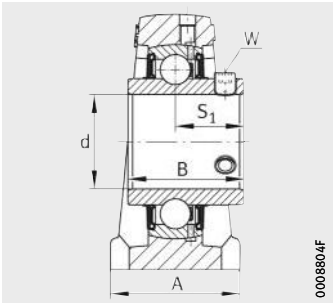

UCPA

					Width across flats		Load carrying capacity Bearing		
							Basic load ratings		Fatigue limit load
A	H_2	K	B	S_1	W		dyn. C_r	stat. C_{0r}	C_{ur}
					mm	inch	N	N	N
48	95	M14	42,9	25,4	–	5/32	27 500	15 300	770
48	95	M14	42,9	25,4	–	5/32	27 500	15 300	770
48	95	M14	42,9	25,4	–	5/32	27 500	15 300	770
48	95	M14	42,9	25,4	4	–	27 500	15 300	770
48	95	M14	42,9	25,4	–	5/32	27 500	15 300	770
54	100	M14	49,2	30,2	–	5/32	34 500	19 800	1 010
54	100	M14	49,2	30,2	–	5/32	34 500	19 800	1 010
54	100	M14	49,2	30,2	4	–	34 500	19 800	1 010
54	108	M14	49,2	30,2	–	5/32	34 500	20 400	1 030
54	108	M14	49,2	30,2	–	5/32	34 500	20 400	1 030
54	108	M14	49,2	30,2	–	5/32	34 500	20 400	1 030
54	108	M14	49,2	30,2	4	–	34 500	20 400	1 030
60	116	M16	51,6	32,6	–	3/16	37 500	23 200	1 180
60	116	M16	51,6	32,6	–	3/16	37 500	23 200	1 180
60	116	M16	51,6	32,6	–	3/16	37 500	23 200	1 180
60	116	M16	51,6	32,6	5	–	37 500	23 200	1 180
60	116	M16	51,6	32,6	–	3/16	37 500	23 200	1 180

Two-bolt flanged housing units

Oval version
With grub screws in inner ring

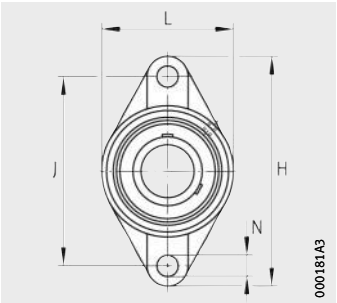

UCFL

Dimension table · Dimensions in mm and inch

Designation			Mass	Dimensions				
Unit	Housing	Radial insert ball bearing	m	d		H	J	L
			≈ kg	mm	inch			
UCFL201	FL204	UC201	0,47	**12**	–	113	90	60
UCFL201-08	FL204	UC201-08	0,47	**12,7**	1/2	113	90	60
UCFL202-09	FL204	UC202-09	0,46	**14,288**	9/16	113	90	60
UCFL202	FL204	UC202	0,46	**15**	–	113	90	60
UCFL202-10	FL204	UC202-10	0,45	**15,875**	5/8	113	90	60
UCFL203	FL204	UC203	0,44	**17**	–	113	90	60
UCFL203-11	FL204	UC203-11	0,44	**17,463**	11/16	113	90	60
UCFL204-12	FL204	UC204-12	0,43	**19,05**	3/4	113	90	60
UCFL204	FL204	UC204	0,42	**20**	–	113	90	60
UCFL205-13	FL205	UC205-13	0,68	**20,638**	13/16	130	99	68
UCFL205-14	FL205	UC205-14	0,67	**22,225**	7/8	130	99	68
UCFL205-15	FL205	UC205-15	0,65	**23,813**	15/16	130	99	68
UCFL205	FL205	UC205	0,64	**25**	–	130	99	68
UCFL205-16	FL205	UC205-16	0,64	**25,4**	1	130	99	68
UCFL206-17	FL206	UC206-17	0,92	**26,988**	1 1/16	148	117	80
UCFL206-18	FL206	UC206-18	0,9	**28,575**	1 1/8	148	117	80
UCFL206	FL206	UC206	0,88	**30**	–	148	117	80
UCFL206-19	FL206	UC206-19	0,88	**30,163**	1 3/16	148	117	80
UCFL206-20	FL206	UC206-20	0,85	**31,75**	1 1/4	148	117	80
UCFL207-20	FL207	UC207-20	1,27	**31,75**	1 1/4	161	130	90
UCFL207-21	FL207	UC207-21	1,24	**33,338**	1 5/16	161	130	90
UCFL207-22	FL207	UC207-22	1,21	**34,925**	1 3/8	161	130	90
UCFL207	FL207	UC207	1,21	**35**	–	161	130	90
UCFL207-23	FL207	UC207-23	1,18	**36,513**	1 7/16	161	130	90
UCFL208-24	FL208	UC208-24	1,53	**38,1**	1 1/2	175	144	100
UCFL208-25	FL208	UC208-25	1,49	**39,688**	1 9/16	175	144	100
UCFL208	FL208	UC208	1,48	**40**	–	175	144	100

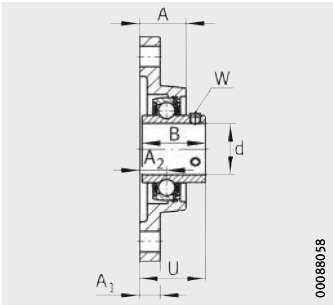

UCFL

						Width across flats		Load carrying capacity Bearing		
								Basic load ratings		Fatigue limit load
A	A_1	A_2	N	B	U	W		dyn. C_r	stat. C_{0r}	C_{ur}
						mm	inch	N	N	N
25,5	12	15	12	31	33,3	3	–	13 600	6 600	335
25,5	12	15	12	31	33,3	–	1/8	13 600	6 600	335
25,5	12	15	12	31	33,3	–	1/8	13 600	6 600	335
25,5	12	15	12	31	33,3	3	–	13 600	6 600	335
25,5	12	15	12	31	33,3	–	1/8	13 600	6 600	335
25,5	12	15	12	31	33,3	3	–	13 600	6 600	335
25,5	12	15	12	31	33,3	–	1/8	13 600	6 600	335
25,5	12	15	12	31	33,3	–	1/8	13 600	6 600	335
25,5	12	15	12	31	33,3	3	–	13 600	6 600	335
27	15	16	16	34,1	35,8	–	1/8	14 900	7 800	395
27	15	16	16	34,1	35,8	–	1/8	14 900	7 800	395
27	15	16	16	34,1	35,8	–	1/8	14 900	7 800	395
27	15	16	16	34,1	35,8	3	–	14 900	7 800	395
27	15	16	16	34,1	35,8	–	1/8	14 900	7 800	395
31	14	18	16	38,1	40,2	–	1/8	20 700	11 300	570
31	14	18	16	38,1	40,2	–	1/8	20 700	11 300	570
31	14	18	16	38,1	40,2	3	–	20 700	11 300	570
31	14	18	16	38,1	40,2	–	1/8	20 700	11 300	570
31	14	18	16	38,1	40,2	–	1/8	20 700	11 300	570
34	16	19	16	42,9	44,4	–	5/32	27 500	15 300	770
34	16	19	16	42,9	44,4	–	5/32	27 500	15 300	770
34	16	19	16	42,9	44,4	–	5/32	27 500	15 300	770
34	16	19	16	42,9	44,4	4	–	27 500	15 300	770
34	16	19	16	42,9	44,4	–	5/32	27 500	15 300	770
36	16	21	16	49,2	51,2	–	5/32	34 500	19 800	1 010
36	16	21	16	49,2	51,2	–	5/32	34 500	19 800	1 010
36	16	21	16	49,2	51,2	4	–	34 500	19 800	1 010

Two-bolt flanged housing units

Oval version
With grub screws in inner ring

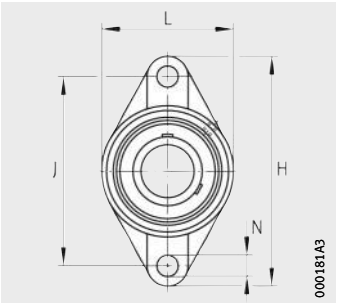

UCFL

Dimension table (continued) · Dimensions in mm and inch

Designation			Mass	Dimensions				
Unit	Housing	Radial insert ball bearing	m	d		H	J	L
			≈ kg	mm	inch			
UCFL209-26	FL209	UC209-26	2,05	**41,275**	$1\frac{5}{8}$	188	148	108
UCFL209-27	FL209	UC209-27	2,01	**42,863**	$1\frac{11}{16}$	188	148	108
UCFL209-28	FL209	UC209-28	1,97	**44,45**	$1\frac{3}{4}$	188	148	108
UCFL209	FL209	UC209	1,95	**45**	–	188	148	108
UCFL210-29	FL210	UC210-29	2,34	**46,038**	$1\frac{13}{16}$	197	157	115
UCFL210-30	FL210	UC210-30	2,3	**47,625**	$1\frac{7}{8}$	197	157	115
UCFL210-31	FL210	UC210-31	2,25	**49,213**	$1\frac{15}{16}$	197	157	115
UCFL210	FL210	UC210	2,23	**50**	–	197	157	115
UCFL210-32	FL210	UC210-32	2,2	**50,8**	**2**	197	157	115
UCFL211-32	FL211	UC211-32	3,02	**50,8**	**2**	224	184	130
UCFL211-33	FL211	UC211-33	2,96	**52,388**	$2\frac{1}{16}$	224	184	130
UCFL211-34	FL211	UC211-34	2,91	**53,975**	$2\frac{1}{8}$	224	184	130
UCFL211	FL211	UC211	2,87	**55**	–	224	184	130
UCFL211-35	FL211	UC211-35	2,85	**55,563**	$2\frac{3}{16}$	224	184	130
UCFL212-36	FL212	UC212-36	4,1	**57,15**	$2\frac{1}{4}$	250	202	140
UCFL212-37	FL212	UC212-37	4,02	**58,738**	$2\frac{5}{16}$	250	202	140
UCFL212	FL212	UC212	3,96	**60**	–	250	202	140
UCFL212-38	FL212	UC212-38	3,95	**60,325**	$2\frac{3}{8}$	250	202	140
UCFL212-39	FL212	UC212-39	3,87	**61,913**	$2\frac{7}{16}$	250	202	140
UCFL213-40	FL213	UC213-40	4,78	**63,5**	$2\frac{1}{2}$	258	210	155
UCFL213	FL213	UC213	4,69	**65**	–	258	210	155
UCFL213-41	FL213	UC213-41	4,68	**65,088**	$2\frac{9}{16}$	258	210	155

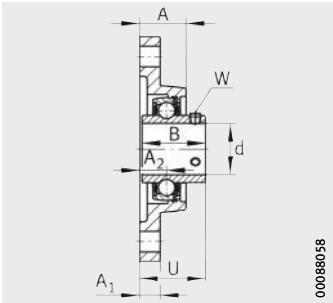

UCFL

						Width across flats		Load carrying capacity Bearing		
								Basic load ratings		Fatigue limit load
A	A_1	A_2	N	B	U	W		dyn. C_r	stat. C_{0r}	C_{ur}
						mm	inch	N	N	N
38	18	22	19	49,2	52,2	–	5/32	34 500	20 400	1 030
38	18	22	19	49,2	52,2	–	5/32	34 500	20 400	1 030
38	18	22	19	49,2	52,2	–	5/32	34 500	20 400	1 030
38	18	22	19	49,2	52,2	4	–	34 500	20 400	1 030
40	18	22	19	51,6	54,6	–	3/16	37 500	23 200	1 180
40	18	22	19	51,6	54,6	–	3/16	37 500	23 200	1 180
40	18	22	19	51,6	54,6	–	3/16	37 500	23 200	1 180
40	18	22	19	51,6	54,6	5	–	37 500	23 200	1 180
40	18	22	19	51,6	54,6	–	3/16	37 500	23 200	1 180
43	20	25	19	55,6	58,4	–	3/16	46 000	29 000	1 480
43	20	25	19	55,6	58,4	–	3/16	46 000	29 000	1 480
43	20	25	19	55,6	58,4	–	3/16	46 000	29 000	1 480
43	20	25	19	55,6	58,4	5	–	46 000	29 000	1 480
43	20	25	19	55,6	58,4	–	3/16	46 000	29 000	1 480
48	20	29	23	65,1	68,7	–	3/16	56 000	36 000	1 820
48	20	29	23	65,1	68,7	–	3/16	56 000	36 000	1 820
48	20	29	23	65,1	68,7	5	–	56 000	36 000	1 820
48	20	29	23	65,1	68,7	–	3/16	56 000	36 000	1 820
48	20	29	23	65,1	68,7	–	3/16	56 000	36 000	1 820
50	24	30	23	65,1	69,7	–	1/4	61 000	40 000	2 030
50	24	30	23	65,1	69,7	6	–	61 000	40 000	2 030
50	24	30	23	65,1	69,7	–	1/4	61 000	40 000	2 030

Two-bolt flanged housing units

Oval version
With grub screws in inner ring

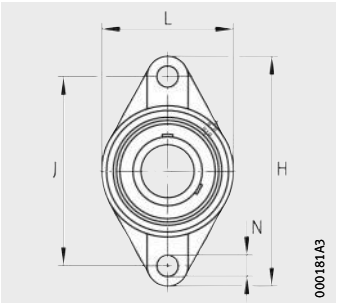

UCFL

Dimension table (continued) · Dimensions in mm and inch

Designation			Mass	Dimensions				
Unit	Housing	Radial insert ball bearing	m	d		H	J	L
			≈ kg	mm	inch			
UCFL214-42	FL214	UC214-42	5,45	**66,675**	$2^{5}/_{8}$	265	216	160
UCFL214-43	FL214	UC214-43	5,35	**68,263**	$2^{11}/_{16}$	265	216	160
UCFL214-44	FL214	UC214-44	5,25	**69,85**	$2^{3}/_{4}$	265	216	160
UCFL214	FL214	UC214	5,25	**70**	–	265	216	160
UCFL215-45	FL215	UC215-45	5,94	**71,438**	$2^{13}/_{16}$	275	225	165
UCFL215-46	FL215	UC215-46	5,82	**73,025**	$2^{7}/_{8}$	275	225	165
UCFL215-47	FL215	UC215-47	5,72	**74,613**	$2^{15}/_{16}$	275	225	165
UCFL215	FL215	UC215	5,69	**75**	–	275	225	165
UCFL215-48	FL215	UC215-48	5,61	**76,2**	3	275	225	165
UCFL216-49	FL216	UC216-49	7,41	**77,788**	$3^{1}/_{16}$	290	233	180
UCFL216-50	FL216	UC216-50	7,29	**79,375**	$3^{1}/_{8}$	290	233	180
UCFL216	FL216	UC216	7,24	**80**	–	290	233	180
UCFL216-51	FL216	UC216-51	7,16	**80,963**	$3^{3}/_{16}$	290	233	180
UCFL217-52	FL217	UC217-52	9,01	**82,55**	$3^{1}/_{4}$	305	248	190
UCFL217-53	FL217	UC217-53	8,85	**84,138**	$3^{5}/_{16}$	305	248	190
UCFL217	FL217	UC217	8,77	**85**	–	305	248	190
UCFL217-55	FL217	UC217-55	8,54	**87,313**	$3^{7}/_{16}$	305	248	190
UCFL218-56	FL218	UC218-56	10,51	**88,9**	$3^{1}/_{2}$	320	265	205
UCFL218	FL218	UC218	10,4	**90**	–	320	265	205

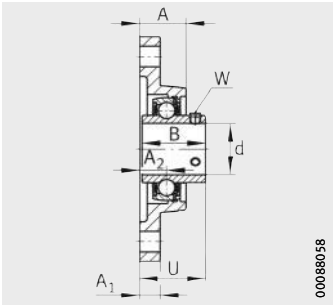

UCFL

						Width across flats		Load carrying capacity Bearing		
								Basic load ratings		Fatigue limit load
A	A_1	A_2	N	B	U	W		dyn. C_r	stat. C_{0r}	C_{ur}
						mm	inch	N	N	N
54	24	31	23	74,6	75,4	–	1/4	66 000	44 000	2 230
54	24	31	23	74,6	75,4	–	1/4	66 000	44 000	2 230
54	24	31	23	74,6	75,4	–	1/4	66 000	44 000	2 230
54	24	31	23	74,6	75,4	6	–	66 000	44 000	2 230
56	24	34	23	77,8	78,5	–	1/4	66 000	44 500	2 240
56	24	34	23	77,8	78,5	–	1/4	66 000	44 500	2 240
56	24	34	23	77,8	78,5	–	1/4	66 000	44 500	2 240
56	24	34	23	77,8	78,5	6	–	66 000	44 500	2 240
56	24	34	23	77,8	78,5	–	1/4	66 000	44 500	2 240
58	24	34	25	82,6	83,3	–	1/4	76 000	54 000	2 600
58	24	34	25	82,6	83,3	–	1/4	76 000	54 000	2 600
58	24	34	25	82,6	83,3	6	–	76 000	54 000	2 600
58	24	34	25	82,6	83,3	–	1/4	76 000	54 000	2 600
63	26	36	25	85,7	87,6	–	1/4	88 000	64 000	2 950
63	26	36	25	85,7	87,6	–	1/4	88 000	64 000	2 950
63	26	36	25	85,7	87,6	6	–	88 000	64 000	2 950
63	26	36	25	85,7	87,6	–	1/4	88 000	64 000	2 950
68	26	40	25	96	96,3	–	1/4	102 000	72 000	3 250
68	26	40	25	96	96,3	6	–	102 000	72 000	3 250

Two-bolt flanged housing units

Oval version
With adapter sleeve

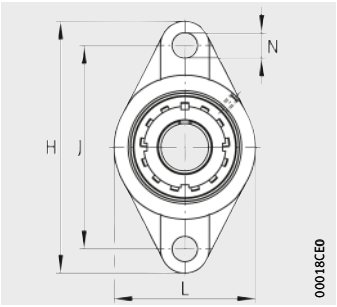

UKFL

Dimension table · Dimensions in mm

Designation			Mass	Dimensions			
Unit	Housing	Radial insert ball bearing	m ≈ kg	d	H	J	L
UKFL205	FL205	UK205	0,69	**20**	130	99	68
UKFL206	FL206	UK206	0,94	**25**	148	117	80
UKFL207	FL207	UK207	1,29	**30**	161	130	90
UKFL208	FL208	UK208	1,56	**35**	175	144	100
UKFL209	FL209	UK209	2,08	**40**	188	148	108
UKFL210	FL210	UK210	2,4	**45**	197	157	115
UKFL211	FL211	UK211	3,04	**50**	224	184	130
UKFL212	FL212	UK212	4,05	**55**	250	202	140
UKFL213	FL213	UK213	4,84	**60**	258	210	155
UKFL215	FL215	UK215	6,14	**65**	275	225	165
UKFL216	FL216	UK216	7,74	**70**	290	233	180
UKFL217	FL217	UK217	9,02	**75**	305	248	190
UKFL218	FL218	UK218	10,91	**80**	320	265	205

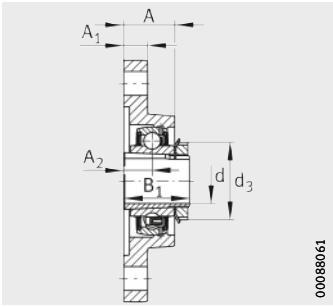

UKFL

						Load carrying capacity Bearing		
						Basic load ratings		Fatigue limit load
A	A_1	A_2	N	B_1	d_3 max.	dyn. C_r N	stat. C_{0r} N	C_{ur} N
27	15	16	16	35	38	14 900	7 800	395
31	14	18	16	38	45	20 700	11 300	570
34	16	19	16	43	52	27 500	15 300	770
36	16	21	16	46	58	34 500	19 800	1 010
38	18	22	19	50	65	34 500	20 400	1 030
40	18	22	19	55	70	37 500	23 200	1 180
43	20	25	19	59	75	46 000	29 000	1 480
48	20	29	23	62	80	56 000	36 000	1 820
50	24	30	23	65	85	61 000	40 000	2 030
56	24	34	23	73	98	66 000	44 500	2 240
58	24	34	25	78	105	76 000	54 000	2 600
63	26	36	25	82	110	88 000	64 000	2 950
68	26	40	25	86	120	102 000	72 000	3 250

Four-bolt flanged housing units

Square version
With grub screws in inner ring

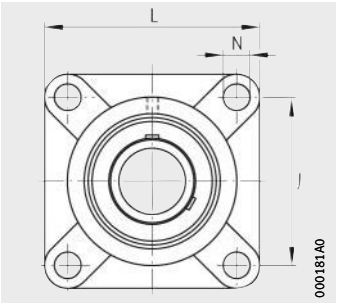

UCF

Dimension table · Dimensions in mm and inch

Designation			Mass	Dimensions				
Unit	Housing	Radial insert ball bearing	m	d		J	L	A
			≈ kg	mm	inch			
UCF201	F204	UC201	0,62	**12**	–	64	86	25,5
UCF201-08	F204	UC201-08	0,62	**12,7**	***1/2***	64	86	25,5
UCF202-09	F204	UC202-09	0,61	**14,288**	***9/16***	64	86	25,5
UCF202	F204	UC202	0,6	**15**	–	64	86	25,5
UCF202-10	F204	UC202-10	0,6	**15,875**	***5/8***	64	86	25,5
UCF203	F204	UC203	0,59	**17**	–	64	86	25,5
UCF203-11	F204	UC203-11	0,59	**17,463**	***11/16***	64	86	25,5
UCF204-12	F204	UC204-12	0,58	**19,05**	***3/4***	64	86	25,5
UCF204	F204	UC204	0,57	**20**	–	64	86	25,5
UCF205-13	F205	UC205-13	0,89	**20,638**	***13/16***	70	95	27
UCF205-14	F205	UC205-14	0,87	**22,225**	***7/8***	70	95	27
UCF205-15	F205	UC205-15	0,86	**23,813**	***15/16***	70	95	27
UCF205	F205	UC205	0,85	**25**	–	70	95	27
UCF205-16	F205	UC205-16	0,84	**25,4**	***1***	70	95	27
UCF206-17	F206	UC206-17	1,15	**26,988**	***1 11/16***	83	108	31
UCF206-18	F206	UC206-18	1,13	**28,575**	***1 1/8***	83	108	31
UCF206	F206	UC206	1,11	**30**	–	83	108	31
UCF206-19	F206	UC206-19	1,11	**30,163**	***1 3/16***	83	108	31
UCF206-20	F206	UC206-20	1,09	**31,75**	***1 1/4***	83	108	31
UCF207-20	F207	UC207-20	1,55	**31,75**	***1 1/4***	92	117	34
UCF207-21	F207	UC207-21	1,53	**33,338**	***1 5/16***	92	117	34
UCF207-22	F207	UC207-22	1,5	**34,925**	***1 3/8***	92	117	34
UCF207	F207	UC207	1,5	**35**	–	92	117	34
UCF207-23	F207	UC207-23	1,47	**36,513**	***1 7/16***	92	117	34
UCF208-24	F208	UC208-24	1,95	**38,1**	***1 1/2***	102	130	36
UCF208-25	F208	UC208-25	1,92	**39,688**	***1 9/16***	102	130	36
UCF208	F208	UC208	1,91	**40**	–	102	130	36

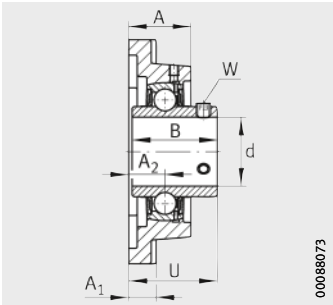

UCF

					Width across flats		Load carrying capacity Bearing		
							Basic load ratings		Fatigue limit load
A_1	A_2	N	B	U	W		dyn. C_r	stat. C_{0r}	C_{ur}
					mm	inch	N	N	N
12	15	12	31	33,3	3	–	13 600	6 600	335
12	15	12	31	33,3	–	1/8	13 600	6 600	335
12	15	12	31	33,3	–	1/8	13 600	6 600	335
12	15	12	31	33,3	3	–	13 600	6 600	335
12	15	12	31	33,3	–	1/8	13 600	6 600	335
12	15	12	31	33,3	3	–	13 600	6 600	335
12	15	12	31	33,3	–	1/8	13 600	6 600	335
12	15	12	31	33,3	–	1/8	13 600	6 600	335
12	15	12	31	33,3	3	–	13 600	6 600	335
14	16	12	34,1	35,8	–	1/8	14 900	7 800	395
14	16	12	34,1	35,8	–	1/8	14 900	7 800	395
14	16	12	34,1	35,8	–	1/8	14 900	7 800	395
14	16	12	34,1	35,8	3	–	14 900	7 800	395
14	16	12	34,1	35,8	–	1/8	14 900	7 800	395
14	18	12	38,1	40,2	–	1/8	20 700	11 300	570
14	18	12	38,1	40,2	–	1/8	20 700	11 300	570
14	18	12	38,1	40,2	3	–	20 700	11 300	570
14	18	12	38,1	40,2	–	1/8	20 700	11 300	570
14	18	12	38,1	40,2	–	1/8	20 700	11 300	570
16	19	14	42,9	44,4	–	5/32	27 500	15 300	770
16	19	14	42,9	44,4	–	5/32	27 500	15 300	770
16	19	14	42,9	44,4	–	5/32	27 500	15 300	770
16	19	14	42,9	44,4	4	–	27 500	15 300	770
16	19	14	42,9	44,4	–	5/32	27 500	15 300	770
16	21	16	49,2	51,2	–	5/32	34 500	19 800	1 010
16	21	16	49,2	51,2	–	5/32	34 500	19 800	1 010
16	21	16	49,2	51,2	4	–	34 500	19 800	1 010

Four-bolt flanged housing units

Square version
With grub screws in inner ring

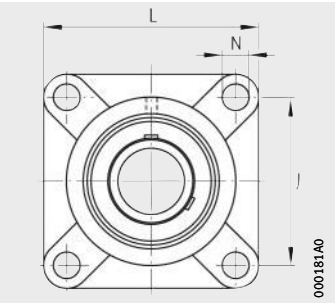

UCF

Dimension table (continued) · Dimensions in mm and inch

Designation			Mass	Dimensions				
Unit	Housing	Radial insert ball bearing	m	d		J	L	A
			≈ kg	mm	inch			
UCF209-26	F209	UC209-26	2,4	**41,275**	***1 5/8***	105	137	38
UCF209-27	F209	UC209-27	2,36	**42,863**	***1 11/16***	105	137	38
UCF209-28	F209	UC209-28	2,32	**44,45**	***1 3/4***	105	137	38
UCF209	F209	UC209	2,3	**45**	–	105	137	38
UCF210-29	F210	UC210-29	2,67	**46,038**	***1 13/16***	111	143	40
UCF210-30	F210	UC210-30	2,63	**47,625**	***1 7/8***	111	143	40
UCF210-31	F210	UC210-31	2,58	**49,213**	***1 15/16***	111	143	40
UCF210	F210	UC210	2,56	**50**	–	111	143	40
UCF210-32	F210	UC210-32	2,53	**50,8**	***2***	111	143	40
UCF211-32	F211	UC211-32	3,46	**50,8**	***2***	130	163	43
UCF211-33	F211	UC211-33	3,4	**52,388**	***2 1/16***	130	163	43
UCF211-34	F211	UC211-34	3,35	**53,975**	***2 1/8***	130	163	43
UCF211	F211	UC211	3,31	**55**	–	130	163	43
UCF211-35	F211	UC211-35	3,29	**55,563**	***2 3/16***	130	163	43
UCF212-36	F212	UC212-36	4,38	**57,15**	***2 1/4***	143	175	48
UCF212-37	F212	UC212-37	4,31	**58,738**	***2 5/16***	143	175	48
UCF212	F212	UC212	4,25	**60**	–	143	175	48
UCF212-38	F212	UC212-38	4,23	**60,325**	***2 3/8***	143	175	48
UCF212-39	F212	UC212-39	4,15	**61,913**	***2 7/16***	143	175	48
UCF213-40	F213	UC213-40	4,98	**63,5**	***2 1/2***	149	187	50
UCF213	F213	UC213	4,9	**65**	–	149	187	50
UCF213-41	F213	UC213-41	4,9	**65,088**	***2 9/16***	149	187	50
UCF214-42	F214	UC214-42	6,19	**66,675**	***2 5/8***	152	193	54
UCF214-43	F214	UC214-43	6,09	**68,263**	***2 11/16***	152	193	54
UCF214-44	F214	UC214-44	5,99	**69,85**	***2 3/4***	152	193	54
UCF214	F214	UC214	5,99	**70**	–	152	193	54

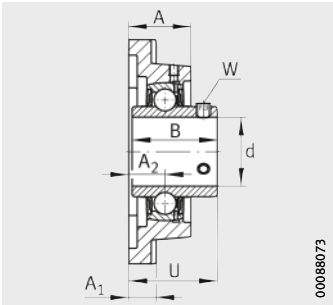

UCF

					Width across flats		Load carrying capacity Bearing		
							Basic load ratings		Fatigue limit load
A_1	A_2	N	B	U	W		dyn. C_r	stat. C_{0r}	C_{ur}
					mm	inch	N	N	N
18	22	16	49,2	52,2	–	5/32	34 500	20 400	1 030
18	22	16	49,2	52,2	–	5/32	34 500	20 400	1 030
18	22	16	49,2	52,2	–	5/32	34 500	20 400	1 030
18	22	16	49,2	52,2	4	–	34 500	20 400	1 030
18	22	16	51,6	54,6	–	3/16	37 500	23 200	1 180
18	22	16	51,6	54,6	–	3/16	37 500	23 200	1 180
18	22	16	51,6	54,6	–	3/16	37 500	23 200	1 180
18	22	16	51,6	54,6	5	–	37 500	23 200	1 180
18	22	16	51,6	54,6	–	3/16	37 500	23 200	1 180
20	25	19	55,6	58,4	–	3/16	46 000	29 000	1 480
20	25	19	55,6	58,4	–	3/16	46 000	29 000	1 480
20	25	19	55,6	58,4	–	3/16	46 000	29 000	1 480
20	25	19	55,6	58,4	5	–	46 000	29 000	1 480
20	25	19	55,6	58,4	–	3/16	46 000	29 000	1 480
20	29	19	65,1	68,7	–	3/16	56 000	36 000	1 820
20	29	19	65,1	68,7	–	3/16	56 000	36 000	1 820
20	29	19	65,1	68,7	5	–	56 000	36 000	1 820
20	29	19	65,1	68,7	–	3/16	56 000	36 000	1 820
20	29	19	65,1	68,7	–	3/16	56 000	36 000	1 820
20	30	19	65,1	69,7	–	1/4	61 000	40 000	2 030
20	30	19	65,1	69,7	6	–	61 000	40 000	2 030
20	30	19	65,1	69,7	–	1/4	61 000	40 000	2 030
24	31	19	74,6	75,4	–	1/4	66 000	44 000	2 230
24	31	19	74,6	75,4	–	1/4	66 000	44 000	2 230
24	31	19	74,6	75,4	–	1/4	66 000	44 000	2 230
24	31	19	74,6	75,4	6	–	66 000	44 000	2 230

Four-bolt flanged housing units

Square version
With grub screws in inner ring

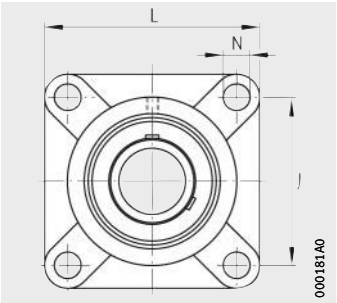

UCF

Dimension table (continued) · Dimensions in mm and inch

Designation			Mass	Dimensions				
Unit	Housing	Radial insert ball bearing	m	d		J	L	A
			≈ kg	mm	inch			
UCF215-45	F215	UC215-45	6,9	**71,438**	$2^{13}/_{16}$	159	200	56
UCF215-46	F215	UC215-46	6,8	**73,025**	$2^{7}/_{8}$	159	200	56
UCF215-47	F215	UC215-47	6,7	**74,613**	$2^{15}/_{16}$	159	200	56
UCF215	F215	UC215	6,7	**75**	–	159	200	56
UCF215-48	F215	UC215-48	6,6	**76,2**	**3**	159	200	56
UCF216-49	F216	UC216-49	7,6	**77,788**	$3^{1}/_{16}$	165	208	58
UCF216-50	F216	UC216-50	7,5	**79,375**	$3^{1}/_{8}$	165	208	58
UCF216	F216	UC216	7,4	**80**	–	165	208	58
UCF216-51	F216	UC216-51	7,3	**80,963**	$3^{3}/_{16}$	165	208	58
UCF217-52	F217	UC217-52	9,3	**82,55**	$3^{1}/_{4}$	175	220	63
UCF217-53	F217	UC217-53	9,1	**84,138**	$3^{5}/_{16}$	175	220	63
UCF217	F217	UC217	9,1	**85**	–	175	220	63
UCF217-55	F217	UC217-55	8,8	**87,313**	$3^{7}/_{16}$	175	220	63
UCF218-56	F218	UC218-56	10,8	**88,9**	$3^{1}/_{2}$	187	235	68
UCF218	F218	UC218	10,7	**90**	–	187	235	68

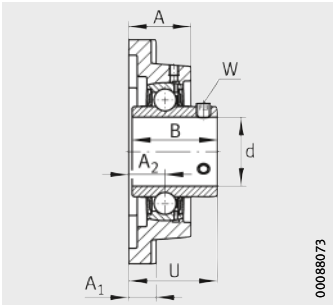

UCF

					Width across flats		Load carrying capacity Bearing		
							Basic load ratings		Fatigue limit load
A_1	A_2	N	B	U	W		dyn. C_r	stat. C_{0r}	C_{ur}
					mm	inch	N	N	N
24	34	19	77,8	78,5	–	1/4	66 000	44 500	2 240
24	34	19	77,8	78,5	–	1/4	66 000	44 500	2 240
24	34	19	77,8	78,5	–	1/4	66 000	44 500	2 240
24	34	19	77,8	78,5	6	–	66 000	44 500	2 240
24	34	19	77,8	78,5	–	1/4	66 000	44 500	2 240
24	34	23	82,6	83,3	–	1/4	76 000	54 000	2 600
24	34	23	82,6	83,3	–	1/4	76 000	54 000	2 600
24	34	23	82,6	83,3	6	–	76 000	54 000	2 600
24	34	23	82,6	83,3	–	1/4	76 000	54 000	2 600
26	36	23	85,7	87,6	–	1/4	88 000	64 000	2 950
26	36	23	85,7	87,6	–	1/4	88 000	64 000	2 950
26	36	23	85,7	87,6	6	–	88 000	64 000	2 950
26	36	23	85,7	87,6	–	1/4	88 000	64 000	2 950
26	40	23	96	96,3	–	1/4	102 000	72 000	3 250
26	40	23	96	96,3	6	–	102 000	72 000	3 250

Four-bolt flanged housing units

Square version
With adapter sleeve

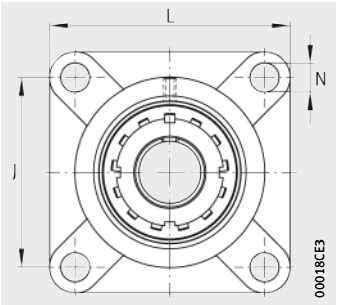

UKF

Dimension table · Dimensions in mm

Designation			Mass	Dimensions			
Unit	Housing	Radial insert ball bearing	m ≈ kg	d	J	L	A
UKF205	F205	UK205	0,9	**20**	70	95	27
UKF206	F206	UK206	1,18	**25**	83	108	31
UKF207	F207	UK207	1,58	**30**	92	117	34
UKF208	F208	UK208	1,99	**35**	102	130	36
UKF209	F209	UK209	2,44	**40**	105	137	38
UKF210	F210	UK210	2,73	**45**	111	143	40
UKF211	F211	UK211	3,48	**50**	130	163	43
UKF212	F212	UK212	4,34	**55**	143	175	48
UKF213	F213	UK213	5,06	**60**	149	187	50
UKF215	F215	UK215	7,13	**65**	159	200	56
UKF216	F216	UK216	7,9	**70**	165	208	58
UKF217	F217	UK217	9,55	**75**	175	220	63
UKF218	F218	UK218	11,16	**80**	187	235	68

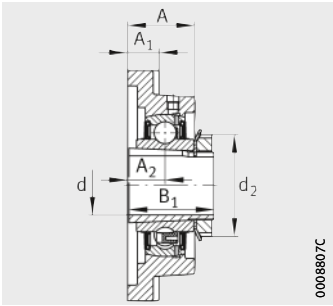

UKF

					Load carrying capacity Bearing		
					Basic load ratings		Fatigue limit load
A_1	A_2	N	B_1	d_2 max.	dyn. C_r N	stat. C_{0r} N	C_{ur} N
14	16	12	35	38	14 900	7 800	395
14	18	12	38	45	20 700	11 300	570
16	19	14	43	52	27 500	15 300	770
16	21	16	46	58	34 500	19 800	1 010
18	22	16	50	65	34 500	20 400	1 030
18	22	16	55	70	37 500	23 200	1 180
20	25	19	59	75	46 000	29 000	1 480
20	29	19	62	80	56 000	36 000	1 820
20	30	19	65	85	61 000	40 000	2 030
24	34	19	73	98	66 000	44 500	2 240
24	34	23	78	105	76 000	54 000	2 600
26	36	23	82	110	88 000	64 000	2 950
26	40	23	86	120	102 000	72 000	3 250

Four-bolt flanged housing units

Round version
With grub screws in inner ring

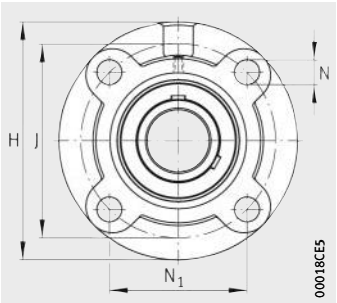

UCFC

Dimension table · Dimensions in mm and inch

Designation			Mass	Dimensions						
Unit	Housing	Radial insert ball bearing	m	d		H	J	A	A_1	A_2
			≈ kg	mm	inch					
UCFC201	FC204	UC201	0,77	**12**	–	100	78	20,5	8	10
UCFC201-08	FC204	UC201-08	0,77	**12,7**	***1/2***	100	78	20,5	8	10
UCFC202-09	FC204	UC202-09	0,76	**14,288**	***9/16***	100	78	20,5	8	10
UCFC202	FC204	UC202	0,76	**15**	–	100	78	20,5	8	10
UCFC202-10	FC204	UC202-10	0,75	**15,875**	***5/8***	100	78	20,5	8	10
UCFC203	FC204	UC203	0,74	**17**	–	100	78	20,5	8	10
UCFC203-11	FC204	UC203-11	0,74	**17,463**	***11/16***	100	78	20,5	8	10
UCFC204-12	FC204	UC204-12	0,73	**19,05**	***3/4***	100	78	20,5	8	10
UCFC204	FC204	UC204	0,72	**20**	–	100	78	20,5	8	10
UCFC205-13	FC205	UC205-13	0,98	**20,638**	***13/16***	115	90	21	7	10
UCFC205-14	FC205	UC205-14	0,97	**22,225**	***7/8***	115	90	21	7	10
UCFC205-15	FC205	UC205-15	0,95	**23,813**	***15/16***	115	90	21	7	10
UCFC205	FC205	UC205	0,94	**25**	–	115	90	21	7	10
UCFC205-16	FC205	UC205-16	0,94	**25,4**	***1***	115	90	21	7	10
UCFC206-17	FC206	UC206-17	1,29	**26,988**	***1 1/16***	125	100	23	8	10
UCFC206-18	FC206	UC206-18	1,27	**28,575**	***1 1/8***	125	100	23	8	10
UCFC206	FC206	UC206	1,25	**30**	–	125	100	23	8	10
UCFC206-19	FC206	UC206-19	1,25	**30,163**	***1 3/16***	125	100	23	8	10
UCFC206-20	FC206	UC206-20	1,23	**31,75**	***1 1/4***	125	100	23	8	10
UCFC207-20	FC207	UC207-20	1,76	**31,75**	***1 1/4***	135	110	26	9	11
UCFC207-21	FC207	UC207-21	1,73	**33,338**	***1 5/16***	135	110	26	9	11
UCFC207-22	FC207	UC207-22	1,7	**34,925**	***1 3/8***	135	110	26	9	11
UCFC207	FC207	UC207	1,7	**35**	–	135	110	26	9	11
UCFC207-23	FC207	UC207-23	1,67	**36,513**	***1 7/16***	135	110	26	9	11

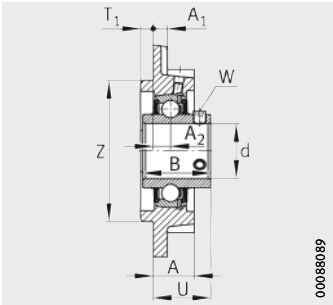

UCFC

						Width across flats		Load carrying capacity Bearing		
								Basic load ratings		Fatigue limit load
N	N_1	B	T_1	U	Z	W		dyn. C_r	stat. C_{0r}	C_{ur}
					h8	mm	inch	N	N	N
12	55,1	31	5	28,3	62	3	–	13 600	6 600	335
12	55,1	31	5	28,3	62	–	1/8	13 600	6 600	335
12	55,1	31	5	28,3	62	–	1/8	13 600	6 600	335
12	55,1	31	5	28,3	62	3	–	13 600	6 600	335
12	55,1	31	5	28,3	62	–	1/8	13 600	6 600	335
12	55,1	31	5	28,3	62	3	–	13 600	6 600	335
12	55,1	31	5	28,3	62	–	1/8	13 600	6 600	335
12	55,1	31	5	28,3	62	–	1/8	13 600	6 600	335
12	55,1	31	5	28,3	62	3	–	13 600	6 600	335
12	63,6	34,1	6	29,8	70	–	1/8	14 900	7 800	395
12	63,6	34,1	6	29,8	70	–	1/8	14 900	7 800	395
12	63,6	34,1	6	29,8	70	–	1/8	14 900	7 800	395
12	63,6	34,1	6	29,8	70	3	–	14 900	7 800	395
12	63,6	34,1	6	29,8	70	–	1/8	14 900	7 800	395
12	70,7	38,1	8	32,2	80	–	1/8	20 700	11 300	570
12	70,7	38,1	8	32,2	80	–	1/8	20 700	11 300	570
12	70,7	38,1	8	32,2	80	3	–	20 700	11 300	570
12	70,7	38,1	8	32,2	80	–	1/8	20 700	11 300	570
12	70,7	38,1	8	32,2	80	–	1/8	20 700	11 300	570
14	77,8	42,9	8	36,4	90	–	5/32	27 500	15 300	770
14	77,8	42,9	8	36,4	90	–	5/32	27 500	15 300	770
14	77,8	42,9	8	36,4	90	–	5/32	27 500	15 300	770
14	77,8	42,9	8	36,4	90	4	–	27 500	15 300	770
14	77,8	42,9	8	36,4	90	–	5/32	27 500	15 300	770

Four-bolt flanged housing units

Round version
With grub screws in inner ring

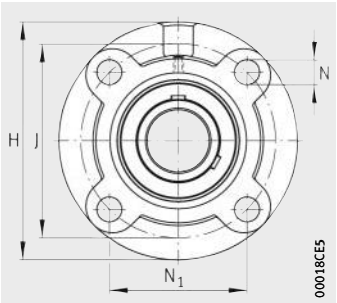

UCFC

Dimension table (continued) · Dimensions in mm and inch

Designation			Mass	Dimensions						
Unit	Housing	Radial insert ball bearing	m	d		H	J	A	A_1	A_2
			≈ kg	mm	inch					
UCFC208-24	FC208	UC208-24	2,08	**38,1**	***1 1/2***	145	120	26	9	11
UCFC208-25	FC208	UC208-25	2,04	**39,688**	***1 9/16***	145	120	26	9	11
UCFC208	FC208	UC208	2,03	**40**	–	145	120	26	9	11
UCFC209-26	FC209	UC209-26	2,78	**41,275**	***1 5/8***	160	132	26	14	10
UCFC209-27	FC209	UC209-27	2,74	**42,863**	***1 11/16***	160	132	26	14	10
UCFC209-28	FC209	UC209-28	2,7	**44,45**	***1 3/4***	160	132	26	14	10
UCFC209	FC209	UC209	2,69	**45**	–	160	132	26	14	10
UCFC210-29	FC210	UC210-29	3,08	**46,038**	***1 13/16***	165	138	28	14	10
UCFC210-30	FC210	UC210-30	3,03	**47,625**	***1 7/8***	165	138	28	14	10
UCFC210-31	FC210	UC210-31	2,98	**49,213**	***1 15/16***	165	138	28	14	10
UCFC210	FC210	UC210	2,96	**50**	–	165	138	28	14	10
UCFC210-32	FC210	UC210-32	2,94	**50,8**	***2***	165	138	28	14	10
UCFC211-32	FC211	UC211-32	4,13	**50,8**	***2***	185	150	31	15	13
UCFC211-33	FC211	UC211-33	4,07	**52,388**	***2 1/16***	185	150	31	15	13
UCFC211-34	FC211	UC211-34	4,02	**53,975**	***2 1/8***	185	150	31	15	13
UCFC211	FC211	UC211	3,98	**55**	–	185	150	31	15	13
UCFC211-35	FC211	UC211-35	3,96	**55,563**	***2 3/16***	185	150	31	15	13
UCFC212-36	FC212	UC212-36	5	**57,15**	***2 1/4***	195	160	36	15	17
UCFC212-37	FC212	UC212-37	4,92	**58,738**	***2 5/16***	195	160	36	15	17
UCFC212	FC212	UC212	4,86	**60**	–	195	160	36	15	17
UCFC212-38	FC212	UC212-38	4,85	**60,325**	***2 3/8***	195	160	36	15	17
UCFC212-39	FC212	UC212-39	4,77	**61,913**	***2 7/16***	195	160	36	15	17

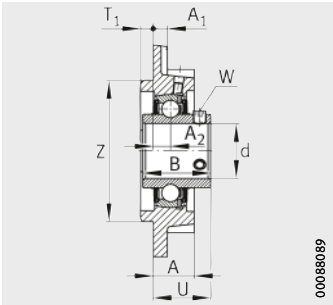

UCFC

						Width across flats		Load carrying capacity Bearing		
								Basic load ratings		Fatigue limit load
N	N_1	B	T_1	U	Z	W		dyn. C_r	stat. C_{0r}	C_{ur}
					h8	mm	inch	N	N	N
14	84,8	49,2	10	41,2	100	–	5/32	34 500	19 800	1 010
14	84,8	49,2	10	41,2	100	–	5/32	34 500	19 800	1 010
14	84,8	49,2	10	41,2	100	4	–	34 500	19 800	1 010
16	93,3	49,2	12	40,2	105	–	5/32	34 500	20 400	1 030
16	93,3	49,2	12	40,2	105	–	5/32	34 500	20 400	1 030
16	93,3	49,2	12	40,2	105	–	5/32	34 500	20 400	1 030
16	93,3	49,2	12	40,2	105	4	–	34 500	20 400	1 030
16	97,6	51,6	12	42,6	110	–	3/16	37 500	23 200	1 180
16	97,6	51,6	12	42,6	110	–	3/16	37 500	23 200	1 180
16	97,6	51,6	12	42,6	110	–	3/16	37 500	23 200	1 180
16	97,6	51,6	12	42,6	110	5	–	37 500	23 200	1 180
16	97,6	51,6	12	42,6	110	–	3/16	37 500	23 200	1 180
19	106,1	55,6	12	46,4	125	–	3/16	46 000	29 000	1 480
19	106,1	55,6	12	46,4	125	–	3/16	46 000	29 000	1 480
19	106,1	55,6	12	46,4	125	–	3/16	46 000	29 000	1 480
19	106,1	55,6	12	46,4	125	5	–	46 000	29 000	1 480
19	106,1	55,6	12	46,4	125	–	3/16	46 000	29 000	1 480
19	113,1	65,1	12	56,7	135	–	3/16	56 000	36 000	1 820
19	113,1	65,1	12	56,7	135	–	3/16	56 000	36 000	1 820
19	113,1	65,1	12	56,7	135	5	–	56 000	36 000	1 820
19	113,1	65,1	12	56,7	135	–	3/16	56 000	36 000	1 820
19	113,1	65,1	12	56,7	135	–	3/16	56 000	36 000	1 820

Four-bolt flanged housing units

Round version
With grub screws in inner ring

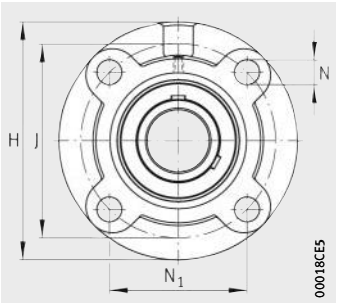

UCFC

Dimension table (continued) · Dimensions in mm and inch

Designation			Mass	Dimensions						
Unit	Housing	Radial insert ball bearing	m	d		H	J	A	A_1	A_2
			≈ kg	mm	inch					
UCFC213-40	FC213	UC213-40	5,55	**63,5**	***2 1/2***	205	170	36	15	16
UCFC213	FC213	UC213	5,47	**65**	–	205	170	36	15	16
UCFC213-41	FC213	UC213-41	5,44	**65,088**	***2 9/16***	205	170	36	15	16
UCFC214-42	FC214	UC214-42	6,84	**66,675**	***2 5/8***	215	177	40	18	17
UCFC214-43	FC214	UC214-43	6,74	**68,263**	***2 11/16***	215	177	40	18	17
UCFC214-44	FC214	UC214-44	6,64	**69,85**	***2 3/4***	215	177	40	18	17
UCFC214	FC214	UC214	6,63	**70**	–	215	177	40	18	17
UCFC215-45	FC215	UC215-45	7,47	**71,438**	***2 13/16***	220	184	40	18	18
UCFC215-46	FC215	UC215-46	7,36	**73,025**	***2 7/8***	220	184	40	18	18
UCFC215-47	FC215	UC215-47	7,25	**74,613**	***2 15/16***	220	184	40	18	18
UCFC215	FC215	UC215	7,22	**75**	–	220	184	40	18	18
UCFC215-48	FC215	UC215-48	7,13	**76,2**	***3***	220	184	40	18	18
UCFC216-49	FC216	UC216-49	8,95	**77,788**	***3 1/16***	240	200	42	18	18
UCFC216-50	FC216	UC216-50	8,82	**79,375**	***3 1/8***	240	200	42	18	18
UCFC216	FC216	UC216	8,8	**80**	–	240	200	42	18	18
UCFC216-51	FC216	UC216-51	8,69	**80,963**	***3 3/16***	240	200	42	18	18
UCFC217-52	FC217	UC217-52	10,59	**82,55**	***3 1/4***	250	208	45	20	18
UCFC217-53	FC217	UC217-53	10,46	**84,138**	***3 5/16***	250	208	45	20	18
UCFC217	FC217	UC217	10,38	**85**	–	250	208	45	20	18
UCFC217-55	FC217	UC217-55	10,17	**87,313**	***3 7/16***	250	208	45	20	18
UCFC218-56	FC218	UC218-56	12,33	**88,9**	***3 1/2***	265	220	50	20	22
UCFC218	FC218	UC218	12,21	**90**	–	265	220	50	20	22

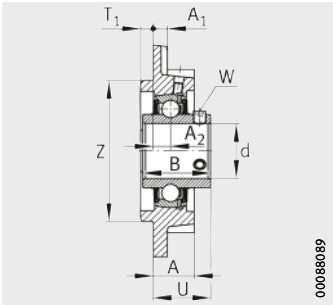

UCFC

						Width across flats		Load carrying capacity Bearing		
								Basic load ratings		Fatigue limit load
N	N_1	B	T_1	U	Z	W		dyn. C_r	stat. C_{0r}	C_{ur}
					h8	mm	inch	N	N	N
19	120,2	65,1	14	55,7	145	–	1/4	61 000	40 000	2 030
19	120,2	65,1	14	55,7	145	6	–	61 000	40 000	2 030
19	120,2	65,1	14	55,7	145	–	1/4	61 000	40 000	2 030
19	125,15	74,6	14	61,4	150	–	1/4	66 000	44 000	2 230
19	125,15	74,6	14	61,4	150	–	1/4	66 000	44 000	2 230
19	125,15	74,6	14	61,4	150	–	1/4	66 000	44 000	2 230
19	125,15	74,6	14	61,4	150	6	–	66 000	44 000	2 230
19	130,1	77,8	16	62,5	160	–	1/4	66 000	44 500	2 240
19	130,1	77,8	16	62,5	160	–	1/4	66 000	44 500	2 240
19	130,1	77,8	16	62,5	160	–	1/4	66 000	44 500	2 240
19	130,1	77,8	16	62,5	160	6	–	66 000	44 500	2 240
19	130,1	77,8	16	62,5	160	–	1/4	66 000	44 500	2 240
23	141,4	82,6	16	67,3	170	–	1/4	76 000	54 000	2 600
23	141,4	82,6	16	67,3	170	–	1/4	76 000	54 000	2 600
23	141,4	82,6	16	67,3	170	6	–	76 000	54 000	2 600
23	141,4	82,6	16	67,3	170	–	1/4	76 000	54 000	2 600
23	147,1	85,7	18	69,6	180	–	1/4	88 000	64 000	2 950
23	147,1	85,7	18	69,6	180	–	1/4	88 000	64 000	2 950
23	147,1	85,7	18	69,6	180	6	–	88 000	64 000	2 950
23	147,1	85,7	18	69,6	180	–	1/4	88 000	64 000	2 950
23	155,55	96	18	78,3	190	–	1/4	102 000	72 000	3 250
23	155,55	96	18	78,3	190	6	–	102 000	72 000	3 250

Four-bolt flanged housing units

Round version
With adapter sleeve

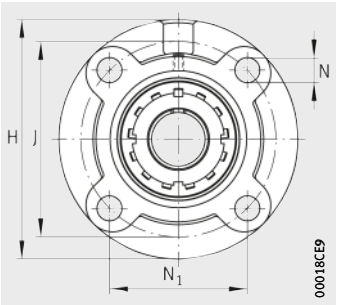

UKFC

Dimension table · Dimensions in mm

Designation			Mass	Dimensions				
Unit	Housing	Radial insert ball bearing	m ≈ kg	d	H	J	A	A_1
UKFC205	FC205	UK205	0,99	**20**	115	90	21	7
UKFC206	FC206	UK206	1,31	**25**	125	100	23	8
UKFC207	FC207	UK207	1,78	**30**	135	110	26	9
UKFC208	FC208	UK208	2,12	**35**	145	120	26	9
UKFC209	FC209	UK209	2,82	**40**	160	132	26	14
UKFC210	FC210	UK210	3,14	**45**	165	138	28	14
UKFC211	FC211	UK211	4,15	**50**	185	150	31	15
UKFC212	FC212	UK212	4,95	**55**	195	160	36	15
UKFC213	FC213	UK213	5,62	**60**	205	170	36	15
UKFC215	FC215	UK215	7,7	**65**	220	184	40	18
UKFC216	FC216	UK216	9,33	**70**	240	200	42	18
UKFC217	FC217	UK217	10,87	**75**	250	208	45	20
UKFC218	FC218	UK218	12,76	**80**	265	220	50	20

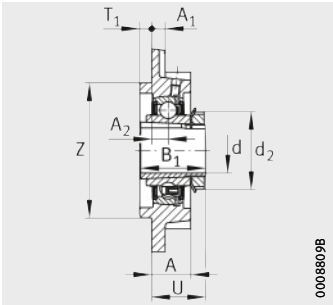

UKFC

								Load carrying capacity Bearing		
								Basic load ratings		Fatigue limit load
A_2	N	N_1	B_1	T_1	U	Z h8	d_2 max.	dyn. C_r N	stat. C_{0r} N	C_{ur} N
10	12	63,6	35	6	30,7	70	38	14 900	7 800	395
10	12	70,7	38	8	32,2	80	45	20 700	11 300	570
11	14	77,8	43	8	35,7	90	52	27 500	15 300	770
11	14	84,8	46	10	37,7	100	58	34 500	19 800	1 010
10	16	93,3	50	12	38,2	105	65	34 500	20 400	1 030
10	16	97,6	55	12	40,2	110	70	37 500	23 200	1 180
13	19	106,1	59	12	44,2	125	75	46 000	29 000	1 480
17	19	113,1	62	12	51,2	135	80	56 000	36 000	1 820
16	19	120,2	65	14	51,2	145	85	61 000	40 000	2 030
18	19	130,1	73	16	55	160	98	66 000	44 500	2 240
18	23	141,4	78	16	58,2	170	105	76 000	54 000	2 600
18	23	147,1	82	18	60,2	180	110	88 000	64 000	2 950
22	23	155,55	86	18	65,7	190	120	102 000	72 000	3 250

Take-up housing units

For linear motion
With grub screws in inner ring

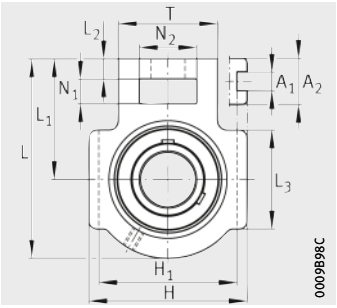

UCT

Dimension table · Dimensions in mm and inch

Designation			Mass	Dimensions							
Unit	Housing	Radial insert ball bearing	m	d		H	L	L_1	L_2	L_3	A
			≈ kg	mm	inch						
UCT201	T204	UC201	0,77	**12**	–	89	94	61	10	51	32
UCT201-08	T204	UC201-08	0,77	**12,7**	1/2	89	94	61	10	51	32
UCT202-09	T204	UC202-09	0,76	**14,288**	9/16	89	94	61	10	51	32
UCT202	T204	UC202	0,75	**15**	–	89	94	61	10	51	32
UCT202-10	T204	UC202-10	0,75	**15,875**	5/8	89	94	61	10	51	32
UCT203	T204	UC203	0,74	**17**	–	89	94	61	10	51	32
UCT203-11	T204	UC203-11	0,74	**17,463**	11/16	89	94	61	10	51	32
UCT204-12	T204	UC204-12	0,73	**19,05**	3/4	89	94	61	10	51	32
UCT204	T204	UC204	0,72	**20**	–	89	94	61	10	51	32
UCT205-13	T205	UC205-13	0,84	**20,638**	13/16	89	97	62	10	51	32
UCT205-14	T205	UC205-14	0,83	**22,225**	7/8	89	97	62	10	51	32
UCT205-15	T205	UC205-15	0,81	**23,813**	15/16	89	97	62	10	51	32
UCT205	T205	UC205	0,8	**25**	–	89	97	62	10	51	32
UCT205-16	T205	UC205-16	0,8	**25,4**	1	89	97	62	10	51	32
UCT206-17	T206	UC206-17	1,27	**26,988**	1 1/16	102	113	70	10	57	37
UCT206-18	T206	UC206-18	1,25	**28,575**	1 1/8	102	113	70	10	57	37
UCT206	T206	UC206	1,23	**30**	–	102	113	70	10	57	37
UCT206-19	T206	UC206-19	1,23	**30,163**	1 3/16	102	113	70	10	57	37
UCT206-20	T206	UC206-20	1,2	**31,75**	1 1/4	102	113	70	10	57	37
UCT207-20	T207	UC207-20	1,64	**31,75**	1 1/4	102	129	78	13	64	37
UCT207-21	T207	UC207-21	1,61	**33,338**	1 5/16	102	129	78	13	64	37
UCT207-22	T207	UC207-22	1,58	**34,925**	1 3/8	102	129	78	13	64	37
UCT207	T207	UC207	1,58	**35**	–	102	129	78	13	64	37
UCT207-23	T207	UC207-23	1,55	**36,513**	1 7/16	102	129	78	13	64	37

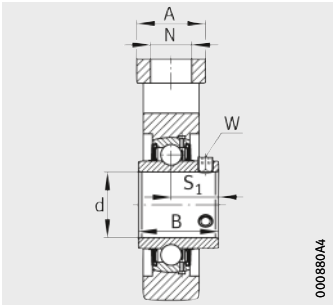

UCT

									Width across flats		Load carrying capacity Bearing		
											Basic load ratings		Fatigue limit load
A_1	A_2	H_1	N	N_1	N_2	B	S_1	T	W		dyn. C_r	stat. C_{0r}	C_{ur}
+0,2/0		0/−0,5							mm	inch	N	N	N
12	21	76	19	16	32	31	18,3	51	3	–	13 600	6 600	335
12	21	76	19	16	32	31	18,3	51	–	1/8	13 600	6 600	335
12	21	76	19	16	32	31	18,3	51	–	1/8	13 600	6 600	335
12	21	76	19	16	32	31	18,3	51	3	–	13 600	6 600	335
12	21	76	19	16	32	31	18,3	51	–	1/8	13 600	6 600	335
12	21	76	19	16	32	31	18,3	51	3	–	13 600	6 600	335
12	21	76	19	16	32	31	18,3	51	–	1/8	13 600	6 600	335
12	21	76	19	16	32	31	18,3	51	–	1/8	13 600	6 600	335
12	21	76	19	16	32	31	18,3	51	3	–	13 600	6 600	335
12	24	76	19	16	32	34,1	19,8	51	–	1/8	14 900	7 800	395
12	24	76	19	16	32	34,1	19,8	51	–	1/8	14 900	7 800	395
12	24	76	19	16	32	34,1	19,8	51	–	1/8	14 900	7 800	395
12	24	76	19	16	32	34,1	19,8	51	3	–	14 900	7 800	395
12	24	76	19	16	32	34,1	19,8	51	–	1/8	14 900	7 800	395
12	28	89	22	16	37	38,1	22,2	56	–	1/8	20 700	11 300	570
12	28	89	22	16	37	38,1	22,2	56	–	1/8	20 700	11 300	570
12	28	89	22	16	37	38,1	22,2	56	3	–	20 700	11 300	570
12	28	89	22	16	37	38,1	22,2	56	–	1/8	20 700	11 300	570
12	28	89	22	16	37	38,1	22,2	56	–	1/8	20 700	11 300	570
12	30	89	22	16	37	42,9	25,4	64	–	5/32	27 500	15 300	770
12	30	89	22	16	37	42,9	25,4	64	–	5/32	27 500	15 300	770
12	30	89	22	16	37	42,9	25,4	64	–	5/32	27 500	15 300	770
12	30	89	22	16	37	42,9	25,4	64	4	–	27 500	15 300	770
12	30	89	22	16	37	42,9	25,4	64	–	5/32	27 500	15 300	770

Take-up housing units

For linear motion
With grub screws in inner ring

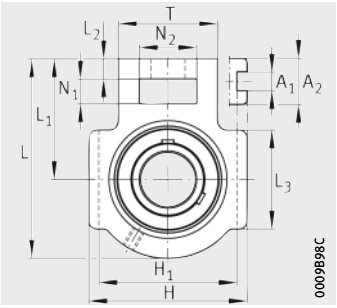

UCT

Dimension table (continued) · Dimensions in mm and inch

Designation			Mass	Dimensions							
Unit	Housing	Radial insert ball bearing	m	d		H	L	L_1	L_2	L_3	A
			≈ kg	mm	inch						
UCT208-24	T208	UC208-24	2,36	**38,1**	***1 1/2***	114	144	88	16	83	49
UCT208-25	T208	UC208-25	2,33	**39,688**	***1 9/16***	114	144	88	16	83	49
UCT208	T208	UC208	2,32	**40**	–	114	144	88	16	83	49
UCT209-26	T209	UC209-26	2,46	**41,275**	***1 5/8***	117	144	87	16	83	49
UCT209-27	T209	UC209-27	2,42	**42,863**	***1 11/16***	117	144	87	16	83	49
UCT209-28	T209	UC209-28	2,38	**44,45**	***1 3/4***	117	144	87	16	83	49
UCT209	T209	UC209	2,37	**45**	–	117	144	87	16	83	49
UCT210-29	T210	UC210-29	2,64	**46,038**	***1 13/16***	117	149	90	16	86	49
UCT210-30	T210	UC210-30	2,59	**47,625**	***1 7/8***	117	149	90	16	86	49
UCT210-31	T210	UC210-31	2,54	**49,213**	***1 15/16***	117	149	90	16	86	49
UCT210	T210	UC210	2,52	**50**	–	117	149	90	16	86	49
UCT210-32	T210	UC210-32	2,5	**50,8**	***2***	117	149	90	16	86	49
UCT211-32	T211	UC211-32	3,98	**50,8**	***2***	146	171	106	19	95	64
UCT211-33	T211	UC211-33	3,93	**52,388**	***2 1/16***	146	171	106	19	95	64
UCT211-34	T211	UC211-34	3,87	**53,975**	***2 1/8***	146	171	106	19	95	64
UCT211	T211	UC211	3,83	**55**	–	146	171	106	19	95	64
UCT211-35	T211	UC211-35	3,81	**55,563**	***2 3/16***	146	171	106	19	95	64
UCT212-36	T212	UC212-36	4,84	**57,15**	***2 1/4***	146	194	119	19	102	64
UCT212-37	T212	UC212-37	4,77	**58,738**	***2 5/16***	146	194	119	19	102	64
UCT212	T212	UC212	4,71	**60**	–	146	194	119	19	102	64
UCT212-38	T212	UC212-38	4,69	**60,325**	***2 3/8***	146	194	119	19	102	64
UCT212-39	T212	UC212-39	4,61	**61,913**	***2 7/16***	146	194	119	19	102	64

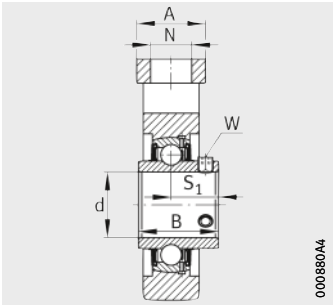

UCT

									Width across flats		Load carrying capacity Bearing		
											Basic load ratings		Fatigue limit load
A_1	A_2	H_1	N	N_1	N_2	B	S_1	T	W		dyn. C_r	stat. C_{0r}	C_{ur}
+0,3/0		0/−0,8							mm	inch	N	N	N
16	33	102	29	19	49	49,2	30,2	83	–	5/32	34 500	19 800	1 010
16	33	102	29	19	49	49,2	30,2	83	–	5/32	34 500	19 800	1 010
16	33	102	29	19	49	49,2	30,2	83	4	–	34 500	19 800	1 010
16	35	102	29	19	49	49,2	30,2	83	–	5/32	34 500	20 400	1 030
16	35	102	29	19	49	49,2	30,2	83	–	5/32	34 500	20 400	1 030
16	35	102	29	19	49	49,2	30,2	83	–	5/32	34 500	20 400	1 030
16	35	102	29	19	49	49,2	30,2	83	4	–	34 500	20 400	1 030
16	37	102	29	19	49	51,6	32,6	83	–	3/16	37 500	23 200	1 180
16	37	102	29	19	49	51,6	32,6	83	–	3/16	37 500	23 200	1 180
16	37	102	29	19	49	51,6	32,6	83	–	3/16	37 500	23 200	1 180
16	37	102	29	19	49	51,6	32,6	83	5	–	37 500	23 200	1 180
16	37	102	29	19	49	51,6	32,6	83	–	3/16	37 500	23 200	1 180
22	38	130	35	25	64	55,6	33,4	102	–	3/16	46 000	29 000	1 480
22	38	130	35	25	64	55,6	33,4	102	–	3/16	46 000	29 000	1 480
22	38	130	35	25	64	55,6	33,4	102	–	3/16	46 000	29 000	1 480
22	38	130	35	25	64	55,6	33,4	102	5	–	46 000	29 000	1 480
22	38	130	35	25	64	55,6	33,4	102	–	3/16	46 000	29 000	1 480
22	42	130	35	32	64	65,1	39,7	102	–	3/16	56 000	36 000	1 820
22	42	130	35	32	64	65,1	39,7	102	–	3/16	56 000	36 000	1 820
22	42	130	35	32	64	65,1	39,7	102	5	–	56 000	36 000	1 820
22	42	130	35	32	64	65,1	39,7	102	–	3/16	56 000	36 000	1 820
22	42	130	35	32	64	65,1	39,7	102	–	3/16	56 000	36 000	1 820

Take-up housing units

For linear motion
With grub screws in inner ring

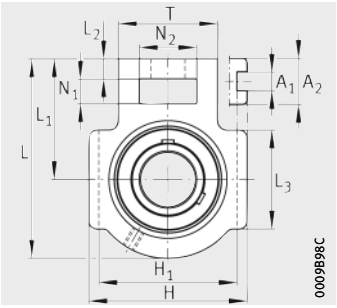

UCT

Dimension table (continued) · Dimensions in mm and inch

Designation			Mass	Dimensions							
Unit	Housing	Radial insert ball bearing	m	d		H	L	L_1	L_2	L_3	A
			≈ kg	mm	inch						
UCT213-40	T213	UC213-40	6,68	**63,5**	$2^1/_2$	167	224	137	21	121	70
UCT213	T213	UC213	6,61	**65**	–	167	224	137	21	121	70
UCT213-41	T213	UC213-41	6,61	**65,088**	$2^9/_{16}$	167	224	137	21	121	70
UCT214-42	T214	UC214-42	6,99	**66,675**	$2^5/_8$	167	224	137	21	121	70
UCT214-43	T214	UC214-43	6,89	**68,263**	$2^{11}/_{16}$	167	224	137	21	121	70
UCT214-44	T214	UC214-44	6,79	**69,85**	$2^3/_4$	167	224	137	21	121	70
UCT214	T214	UC214	6,78	**70**	–	167	224	137	21	121	70
UCT215-45	T215	UC215-45	7,45	**71,438**	$2^{13}/_{16}$	167	232	140	21	121	70
UCT215-46	T215	UC215-46	7,34	**73,025**	$2^7/_8$	167	232	140	21	121	70
UCT215-47	T215	UC215-47	7,23	**74,613**	$2^{15}/_{16}$	167	232	140	21	121	70
UCT215	T215	UC215	7,2	**75**	–	167	232	140	21	121	70
UCT215-48	T215	UC215-48	7,12	**76,2**	3	167	232	140	21	121	70
UCT216-49	T216	UC216-49	8,27	**77,788**	$3^1/_{16}$	184	235	140	21	121	70
UCT216-50	T216	UC216-50	8,15	**79,375**	$3^1/_8$	184	235	140	21	121	70
UCT216	T216	UC216	8,09	**80**	–	184	235	140	21	121	70
UCT216-51	T216	UC216-51	8,01	**80,963**	$3^3/_{16}$	184	235	140	21	121	70
UCT217-52	T217	UC217-52	10,9	**82,55**	$3^1/_4$	198	260	162	29	157	73
UCT217-53	T217	UC217-53	10,8	**84,138**	$3^5/_{16}$	198	260	162	29	157	73
UCT217	T217	UC217	10,7	**85**	–	198	260	162	29	157	73
UCT217-55	T217	UC217-55	10,5	**87,313**	$3^7/_{16}$	198	260	162	29	157	73
UCT218-56	T218	UC218-56	12,37	**88,9**	$3^1/_2$	215	275	170	30	140	80
UCT218	T218	UC218	12,26	**90**	–	215	275	170	30	140	80

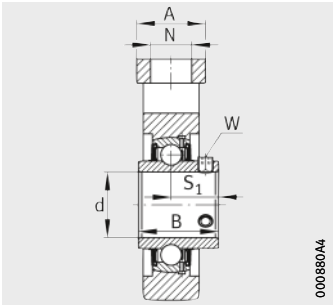

UCT

									Width across flats		Load carrying capacity Bearing		
											Basic load ratings		Fatigue limit load
A_1	A_2	H_1	N	N_1	N_2	B	S_1	T	W		dyn. C_r	stat. C_{0r}	C_{ur}
+0,3/0		0/−0,8							mm	inch	N	N	N
26	44	151	41	32	70	65,1	39,7	111	–	1/4	61 000	40 000	2 030
26	44	151	41	32	70	65,1	39,7	111	6	–	61 000	40 000	2 030
26	44	151	41	32	70	65,1	39,7	111	–	1/4	61 000	40 000	2 030
26	46	151	41	32	70	74,6	44,4	111	–	1/4	66 000	44 000	2 230
26	46	151	41	32	70	74,6	44,4	111	–	1/4	66 000	44 000	2 230
26	46	151	41	32	70	74,6	44,4	111	–	1/4	66 000	44 000	2 230
26	46	151	41	32	70	74,6	44,4	111	6	–	66 000	44 000	2 230
26	48	151	41	32	70	77,8	44,5	111	–	1/4	66 000	44 500	2 240
26	48	151	41	32	70	77,8	44,5	111	–	1/4	66 000	44 500	2 240
26	48	151	41	32	70	77,8	44,5	111	–	1/4	66 000	44 500	2 240
26	48	151	41	32	70	77,8	44,5	111	6	–	66 000	44 500	2 240
26	48	151	41	32	70	77,8	44,5	111	–	1/4	66 000	44 500	2 240
26	51	165	41	32	70	82,6	49,3	111	–	1/4	76 000	54 000	2 600
26	51	165	41	32	70	82,6	49,3	111	–	1/4	76 000	54 000	2 600
26	51	165	41	32	70	82,6	49,3	111	6	–	76 000	54 000	2 600
26	51	165	41	32	70	82,6	49,3	111	–	1/4	76 000	54 000	2 600
30	54	173	48	38	73	85,7	51,6	124	–	1/4	88 000	64 000	2 950
30	54	173	48	38	73	85,7	51,6	124	–	1/4	88 000	64 000	2 950
30	54	173	48	38	73	85,7	51,6	124	6	–	88 000	64 000	2 950
30	54	173	48	38	73	85,7	51,6	124	–	1/4	88 000	64 000	2 950
28	55	190	47	40	80	96	56,3	130	–	1/4	102 000	72 000	3 250
28	55	190	47	40	80	96	56,3	130	6	–	102 000	72 000	3 250

Take-up housing units

For linear motion
With adapter sleeve

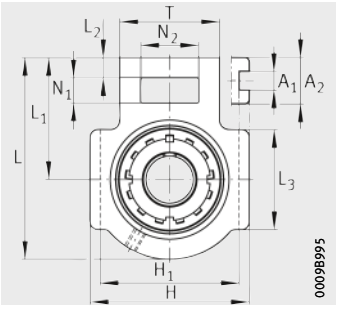

UKT

Dimension table · Dimensions in mm

Designation			Mass	Dimensions						
Unit	Housing	Radial insert ball bearing	m ≈ kg	d	H	L	L_1	L_2	L_3	A
UKT205	T205	UK205	0,85	**20**	89	97	62	10	51	32
UKT206	T206	UK206	1,29	**25**	102	113	70	10	57	37
UKT207	T207	UK207	1,66	**30**	102	129	78	13	64	37
UKT208	T208	UK208	2,4	**35**	114	144	88	16	83	49
UKT209	T209	UK209	2,5	**40**	117	144	87	16	83	49
UKT210	T210	UK210	2,7	**45**	117	149	90	16	86	49
UKT211	T211	UK211	4	**50**	146	171	106	19	95	64
UKT212	T212	UK212	4,79	**55**	146	194	119	19	102	64
UKT213	T213	UK213	6,76	**60**	167	224	137	21	121	70
UKT215	T215	UK215	7,69	**65**	167	232	140	21	121	70
UKT216	T216	UK216	8,6	**70**	184	235	140	21	121	70
UKT217	T217	UK217	11,2	**75**	198	260	162	29	157	73
UKT218	T218	UK218	12,78	**80**	215	275	170	30	140	80

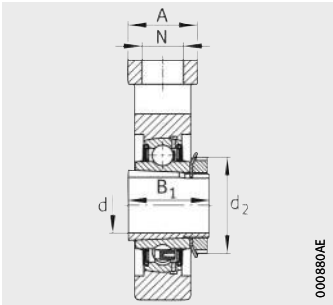

UKT

									Load carrying capacity Bearing		
									Basic load ratings		Fatigue limit load
A_1	A_2	H_1	N	N_1	N_2	B_1	T	d_2 max.	dyn. C_r N	stat. C_{0r} N	C_{ur} N
$12^{+0,2}_{0}$	24	$76^{0}_{-0,5}$	19	16	32	35	51	38	14 900	7 800	395
$12^{+0,2}_{0}$	28	$89^{0}_{-0,5}$	22	16	37	38	56	45	20 700	11 300	570
$12^{+0,2}_{0}$	30	$89^{0}_{-0,5}$	22	16	37	43	64	52	27 500	15 300	770
$16^{+0,2}_{0}$	33	$102^{0}_{-0,5}$	29	19	49	46	83	58	34 500	19 800	1 010
$16^{+0,2}_{0}$	35	$102^{0}_{-0,5}$	29	19	49	50	83	65	34 500	20 400	1 030
$16^{+0,2}_{0}$	37	$102^{0}_{-0,5}$	29	19	49	55	83	70	37 500	23 200	1 180
$22^{+0,3}_{0}$	38	$130^{0}_{-0,8}$	35	25	64	59	102	75	46 000	29 000	1 480
$22^{+0,3}_{0}$	42	$130^{0}_{-0,8}$	35	32	64	62	102	80	56 000	36 000	1 820
$26^{+0,3}_{0}$	44	$151^{0}_{-0,8}$	41	32	70	65	111	85	61 000	40 000	2 030
$26^{+0,3}_{0}$	48	$151^{0}_{-0,8}$	41	32	70	73	111	98	66 000	44 500	2 240
$26^{+0,3}_{0}$	51	$165^{0}_{-0,8}$	41	32	70	78	111	105	76 000	54 000	2 600
$30^{+0,3}_{0}$	54	$173^{0}_{-0,8}$	48	38	73	82	124	110	88 000	64 000	2 950
$28^{+0,3}_{0}$	55	$190^{0}_{-0,8}$	47	40	80	86	130	120	102 000	72 000	3 250

Take-up housing units

For swivel motion
With grub screws in inner ring

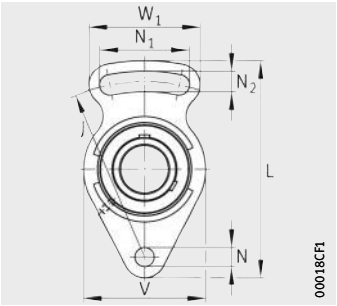

UCFA

Dimension table · Dimensions in mm and inch

Designation			Mass	Dimensions						
Unit	Housing	Radial insert ball bearing	m	d		J	L	A	A_1	A_2
			≈ kg	mm	inch					
UCFA201	FA204	UC201	0,45	**12**	–	78	98	25,5	12	15
UCFA201-08	FA204	UC201-08	0,44	**12,7**	**1/2**	78	98	25,5	12	15
UCFA202-09	FA204	UC202-09	0,43	**14,288**	**9/16**	78	98	25,5	12	15
UCFA202	FA204	UC202	0,43	**15**	–	78	98	25,5	12	15
UCFA202-10	FA204	UC202-10	0,43	**15,875**	**5/8**	78	98	25,5	12	15
UCFA203	FA204	UC203	0,42	**17**	–	78	98	25,5	12	15
UCFA203-11	FA204	UC203-11	0,42	**17,463**	**11/16**	78	98	25,5	12	15
UCFA204-12	FA204	UC204-12	0,41	**19,05**	**3/4**	78	98	25,5	12	15
UCFA204	FA204	UC204	0,41	**20**	–	78	98	25,5	12	15
UCFA205-13	FA205	UC205-13	0,67	**20,638**	**13/16**	98	125	27	14	16
UCFA205-14	FA205	UC205-14	0,66	**22,225**	**7/8**	98	125	27	14	16
UCFA205-15	FA205	UC205-15	0,64	**23,813**	**15/16**	98	125	27	14	16
UCFA205	FA205	UC205	0,63	**25**	–	98	125	27	14	16
UCFA205-16	FA205	UC205-16	0,62	**25,4**	**1**	98	125	27	14	16
UCFA206-17	FA206	UC206-17	0,94	**26,988**	**1 1/16**	117	144	31	14	18
UCFA206-18	FA206	UC206-18	0,92	**28,575**	**1 1/8**	117	144	31	14	18
UCFA206	FA206	UC206	0,9	**30**	–	117	144	31	14	18
UCFA206-19	FA206	UC206-19	0,9	**30,163**	**1 3/16**	117	144	31	14	18
UCFA206-20	FA206	UC206-20	0,88	**31,75**	**1 1/4**	117	144	31	14	18

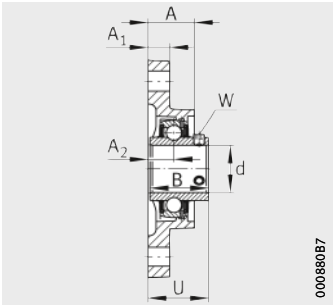

UCFA

							Width across flats		Load carrying capacity Bearing		
									Basic load ratings		Fatigue limit load
N	N_1	N_2	B	U	V	W_1	W		dyn. C_r	stat. C_{0r}	C_{ur}
							mm	inch	N	N	N
10	40	10	31	33,3	60	50	3	–	13 600	6 600	335
10	40	10	31	33,3	60	50	–	1/8	13 600	6 600	335
10	40	10	31	33,3	60	50	–	1/8	13 600	6 600	335
10	40	10	31	33,3	60	50	3	–	13 600	6 600	335
10	40	10	31	33,3	60	50	–	1/8	13 600	6 600	335
10	40	10	31	33,3	60	50	3	–	13 600	6 600	335
10	40	10	31	33,3	60	50	–	1/8	13 600	6 600	335
10	40	10	31	33,3	60	50	–	1/8	13 600	6 600	335
10	40	10	31	33,3	60	50	3	–	13 600	6 600	335
12	51	12	34,1	35,8	68	66	–	1/8	14 900	7 800	395
12	51	12	34,1	35,8	68	66	–	1/8	14 900	7 800	395
12	51	12	34,1	35,8	68	66	–	1/8	14 900	7 800	395
12	51	12	34,1	35,8	68	66	3	–	14 900	7 800	395
12	51	12	34,1	35,8	68	66	–	1/8	14 900	7 800	395
12	58	12	38,1	40,2	80	72	–	1/8	20 700	11 300	570
12	58	12	38,1	40,2	80	72	–	1/8	20 700	11 300	570
12	58	12	38,1	40,2	80	72	3	–	20 700	11 300	570
12	58	12	38,1	40,2	80	72	–	1/8	20 700	11 300	570
12	58	12	38,1	40,2	80	72	–	1/8	20 700	11 300	570

Take-up housing units

For swivel motion
With grub screws in inner ring

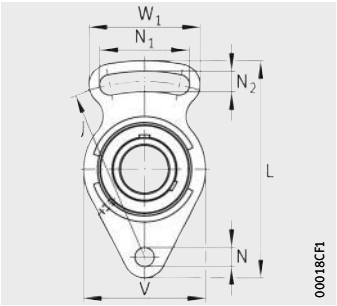

UCFA

Dimension table (continued) · Dimensions in mm and inch

Designation			Mass	Dimensions						
Unit	Housing	Radial insert ball bearing	m	d		J	L	A	A_1	A_2
			≈ kg	mm	inch					
UCFA207-20	FA207	UC207-20	1,29	**31,75**	***1 1/4***	130	161	34	16	19
UCFA207-21	FA207	UC207-21	1,26	**33,338**	***1 5/16***	130	161	34	16	19
UCFA207-22	FA207	UC207-22	1,24	**34,925**	***1 3/8***	130	161	34	16	19
UCFA207	FA207	UC207	1,23	**35**	–	130	161	34	16	19
UCFA207-23	FA207	UC207-23	1,21	**36,513**	***1 7/16***	130	161	34	16	19
UCFA208-24	FA208	UC208-24	1,58	**38,1**	***1 1/2***	144	175	36	16	21
UCFA208-25	FA208	UC208-25	1,54	**39,688**	***1 9/16***	144	175	36	16	21
UCFA208	FA208	UC208	1,53	**40**	–	144	175	36	16	21
UCFA209-26	FA209	UC209-26	1,99	**41,275**	***1 5/8***	148	181	38	18	22
UCFA209-27	FA209	UC209-27	1,95	**42,863**	***1 11/16***	148	181	38	18	22
UCFA209-28	FA209	UC209-28	1,91	**44,45**	***1 3/4***	148	181	38	18	22
UCFA209	FA209	UC209	1,9	**45**	–	148	181	38	18	22
UCFA210-29	FA210	UC210-29	2,2	**46,038**	***1 13/16***	157	190	37,5	18	22
UCFA210-30	FA210	UC210-30	2,16	**47,625**	***1 7/8***	157	190	37,5	18	22
UCFA210-31	FA210	UC210-31	2,11	**49,213**	***1 15/16***	157	190	37,5	18	22
UCFA210	FA210	UC210	2,08	**50**	–	157	190	37,5	18	22
UCFA210-32	FA210	UC210-32	2,06	**50,8**	***2***	157	190	37,5	18	22
UCFA211-32	FA211	UC211-32	3,1	**50,8**	***2***	184	219	43	20	25
UCFA211-33	FA211	UC211-33	3,05	**52,388**	***2 1/16***	184	219	43	20	25
UCFA211-34	FA211	UC211-34	2,99	**53,975**	***2 1/8***	184	219	43	20	25
UCFA211	FA211	UC211	2,95	**55**	–	184	219	43	20	25
UCFA211-35	FA211	UC211-35	2,93	**55,563**	***2 3/16***	184	219	43	20	25

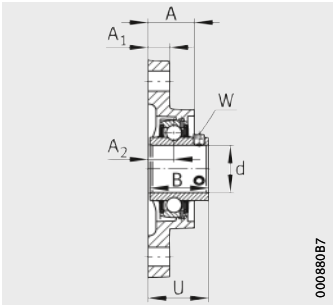

UCFA

							Width across flats		Load carrying capacity Bearing		
									Basic load ratings		Fatigue limit load
N	N_1	N_2	B	U	V	W_1	W		dyn. C_r	stat. C_{0r}	C_{ur}
							mm	inch	N	N	N
14	66	14	42,9	44,4	90	82	–	5/32	27 500	15 300	770
14	66	14	42,9	44,4	90	82	–	5/32	27 500	15 300	770
14	66	14	42,9	44,4	90	82	–	5/32	27 500	15 300	770
14	66	14	42,9	44,4	90	82	4	–	27 500	15 300	770
14	66	14	42,9	44,4	90	82	–	5/32	27 500	15 300	770
14	71	14	49,2	51,2	100	87	–	5/32	34 500	19 800	1 010
14	71	14	49,2	51,2	100	87	–	5/32	34 500	19 800	1 010
14	71	14	49,2	51,2	100	87	4	–	34 500	19 800	1 010
16	72	16	49,2	52,2	108	90	–	5/32	34 500	20 400	1 030
16	72	16	49,2	52,2	108	90	–	5/32	34 500	20 400	1 030
16	72	16	49,2	52,2	108	90	–	5/32	34 500	20 400	1 030
16	72	16	49,2	52,2	108	90	4	–	34 500	20 400	1 030
16	76	16	51,6	54,6	115	94	–	3/16	37 500	23 200	1 180
16	76	16	51,6	54,6	115	94	–	3/16	37 500	23 200	1 180
16	76	16	51,6	54,6	115	94	–	3/16	37 500	23 200	1 180
16	76	16	51,6	54,6	115	94	5	–	37 500	23 200	1 180
16	76	16	51,6	54,6	115	94	–	3/16	37 500	23 200	1 180
16	86	16	55,6	58,4	130	104	–	3/16	46 000	29 000	1 480
16	86	16	55,6	58,4	130	104	–	3/16	46 000	29 000	1 480
16	86	16	55,6	58,4	130	104	–	3/16	46 000	29 000	1 480
16	86	16	55,6	58,4	130	104	5	–	46 000	29 000	1 480
16	86	16	55,6	58,4	130	104	–	3/16	46 000	29 000	1 480

MATNR 036926418-0000 / TPI 219 / 05 / GB-D / 2017101.5 / Printed in Germany by pms

Schaeffler Technologies AG & Co. KG

Georg-Schäfer-Straße 30
97421 Schweinfurt
Germany
Internet www.fag.com
E-mail faginfo@schaeffler.com

In Germany:
Phone 0180 5003872
Fax 0180 5003873

From other countries:
Phone +49 9721 91-0
Fax +49 9721 91-3435

Every care has been taken to ensure the correctness of the information contained in this publication but no liability can be accepted for any errors or omissions.
We reserve the right to make technical changes.

© Schaeffler Technologies AG & Co. KG
Issued: 2017, October

This publication or parts thereof may not be reproduced without our permission.
TPI 219 GB-D