FAG

Split Plummer Block Housings SNS

For shaft diameters of
115 mm to 530 mm and
$4^{7}/_{16}$ inch to $19^{1}/_{2}$ inch

SCHAEFFLER

Foreword

New generation of housings

Plummer block housings SNS represent a completely new generation of large size housings. Through the systematic further development of the proven FAG plummer block housings, Schaeffler can offer even greater efficiency and cost-effectiveness for machinery and plant.

Longer bearing life

The unique housing design gives an increase in the life of the spherical roller bearings fitted in the housing of up to 50%. This is achieved through optimised load distribution in the bearing that occurs due to the interaction of the bearing and housing geometry under load.

Advantages

The most important advantages of the newly developed plummer block housings SNS can be summarised as follows:

- Longer bearing life due to the innovative housing design. This gives lower maintenance and downtime costs of the entire machine or plant.
- Increased strength and shock resistance due to the use of spheroidal graphite cast iron as standard. The highly robust housings are ideally suitable for aggressive environmental conditions such as those in mining applications.
- Different sealing variants allowing matching to an environment with particular contaminant and dust conditions.
- The use of split labyrinth seals gives a considerable reduction in the work involved in replacing seals, especially in combination with the mounting of a split bearing.
- Optimum lubricant supply to the bearing independent of the bearing position by means of a special lubrication groove in the interior of the upper housing section and through grease outlet holes in the lower housing section.
- Design with good anti-corrosion characteristics and reduced cleaning requirements due to inclined run-off areas as well as a projecting upper housing section.
- Indentations indicating the shaft and bearing centre, ensuring rapid and simple alignment of the housing.
- Machined locating surfaces on the housing base, allowing precise alignment of the housing.
- Serial numbering on both halves of the housing, ensuring their correct allocation. This prevents incorrect transposition between the pairs of upper and lower housing sections.
- Prepared mounting points allowing immediate use of Condition Monitoring.

Schaeffler housing range

Schaeffler offers an extensive range of bearing housings and housing units.

Further information

- Catalogue GK 1, Bearing Housings
- Catalogue SG 1, Radial Insert Ball Bearings and Housing Units.

Contents

		Page
Product overview	Split plummer block housings SNS	4
Features	Modular concept	6
	Dimensions and interchangeability	6
	Suitable bearings	7
	Housing material and anti-corrosion protection	8
	Locating and non-locating bearings	9
	Longer bearing life	9
	Advantages of the detailed design	10
	Seals and covers	12
	Housing configurations	16
	Lubrication	20
Design and safety guidelines	Load carrying capacity	25
	Permissible shaft end designs	28
	Mounting and dismounting	29
Accuracy		32
Ordering examples	Designation structure	33
	Examples	37
Dimension tables	Plummer block housings SNS, split, for spherical roller bearings with tapered bore and adapter sleeve, metric shaft	38
	Plummer block housings SNS, split, for spherical roller bearings with cylindrical bore, metric shaft	48
	Plummer block housings SNS, split, for spherical roller bearings with tapered bore and adapter sleeve, inch size shaft	56
	Plummer block housings SNS, split, for spherical roller bearings with tapered bore and adapter sleeve, metric shaft, Bolt-on design	72

Plummer block housings

Split

For labyrinth and Taconite seals

SNS..-H, SNS..-Z

For Bolt-on seals

SNS..-B

Accessories

Labyrinth seals
Taconite seals

NTS

NTC

Split labyrinth seals
Bolt-on seals

NTSG

BTAC

Covers

NDK

BDK

Locating rings

NFR

Split plummer block housings SNS

Features

Split FAG plummer block housings SNS and the associated bearings form bearing arrangement units that can be matched, through the specific selection of seal design, lubrication type and bearing mounting, to a wide range of requirements. The housings are specifically designed for the fitting of spherical roller bearings.

Modular concept

The housings are designed in accordance with a modular concept. Each housing can be fitted with spherical roller bearings of various diameter and width series if they have the correct outside diameter for the housing.

Depending on their design, the bearings can be located either directly on the shaft or by means of an adapter sleeve. This gives different shaft diameters for the same bearing size. The spacings between the shaft and housing body are compensated by means of appropriately matched seals.

Dimensions and interchangeability

The dimensions of the housings conform to ISO 113.

FAG plummer block housings SNS are a further development of the FAG plummer block housings SD31. The design envelope and mounting dimensions of both series of housings are identical and the housings are interchangeable 1:1.

The interchangeability with other series of FAG housings is as follows:

- All bearing series that can be combined with the FAG plummer block housings SD5 and SD6 can be fitted in plummer block housings SNS.
- Bearing series that can be combined with the FAG plummer block housings S30 can only be fitted in certain cases in plummer block housings SNS.

The dimensions of housings SD5, SD6 and S30 are not identical with the dimensions of housings SNS.

Suitable bearings

Split plummer block housings SNS are suitable for fitting with spherical roller bearings with a tapered or cylindrical bore, see table. The range of shaft diameters is 115 mm to 530 mm and $4^{7}/_{16}$ inch to $19^{1}/_{2}$ inch.

Unsplit spherical roller bearings with an adapter sleeve can be replaced by split spherical roller bearings. This gives a considerable reduction in the work associated with bearing replacement in numerous applications.

In order to ensure selection of the correct combination of housing and bearing when using split bearings, please contact us.

Bearing types and sizes

Bearing type	Size
Spherical roller bearings	22232..-K to 22272..-K
with tapered bore and adapter sleeve	22326..-K to 22356..-K
	23036-K to 230/530..-K
	23134..-K to 23196..-K
	23232..-K to 23288..-K
with cylindrical bore	22232 to 22272
	22326 to 22356
	23036 to 230/530
	23134 to 23196
	23232 to 23288
	24036 to 240/530
split	230SM160 to 230SM410
	230S.607 to 230S.1608
	231SM150 to 231SM410
	231S.515 to 231S.1500
	232SM260 to 232SM340
	232S.1200 to 232S.1308

On the basis of the modular concept, one or more series of plummer block housings SNS are suitable for each series of spherical roller bearings, see tables, page 8.

Plummer block housings SNS for spherical roller bearings with tapered bore and adapter sleeve

Bearing Series	Plummer block housing										
	SNS2264		SNS30		SNS31			SNS32		SNS40	
	Suffix										
	H	Z	H	Z	H	Z	B	H	Z	H	Z
222..-K	●	–	●	–	●	–	–	–	–	–	–
223..-K	–	–	●	–	●	–	–	–	–	–	–
230..-K	–	–	●	–	–	–	–	–	–	–	–
231..-K	–	–	–	–	●	–	●	–	–	–	–
232..-K	–	–	●	–	–	–	–	●	–	–	–

● Suitable

Plummer block housings SNS for spherical roller bearings with cylindrical bore

Bearing Series	Plummer block housing										
	SNS2264		SNS30		SNS31			SNS32		SNS40	
	Suffix										
	H	Z	H	Z	H	Z	B	H	Z	H	Z
222	–	●	●	–	●	●	–	–	–	–	–
223	–	–	●	–	●	–	–	–	–	–	–
230	–	–	●	●	–	–	–	–	–	–	–
231	–	–	–	–	●	●	–	–	–	–	–
232	–	–	●	–	–	–	–	–	●	–	–
240	–	–	●	●	–	–	–	–	–	–	●

● Suitable

Plummer block housings SNS for split spherical roller bearings

Bearing Series	Plummer block housing										
	SNS2264		SNS30		SNS31			SNS32		SNS40	
	Suffix										
	H	Z	H	Z	H	Z	B	H	Z	H	Z
230S	–	–	●	–	–	–	–	–	–	–	–
231S	–	–	–	–	●	–	●	–	–	–	–
232S	–	–	–	–	–	–	–	●	–	–	–

● Suitable

Further information

WL 43165, Split Spherical Roller Bearings.

Housing material and anti-corrosion protection

The housing bodies are made from spheroidal graphite cast iron GJS-400-15 (suffix D).

All outer surfaces not machined by chip-forming methods and the locating surfaces on the lower housing section have a universal paint coating (colour RAL 7016, anthracite grey). The coating can be finished using all synthetic resin, polyurethane, acrylic, epoxy resin, chlorinated rubber, nitrocellulose and acid-hardening hammer tone finishes.

Inner and outer surfaces machined by chip-forming methods are provided with anti-corrosion protection that can be easily removed. It is recommended that only volatile solvents and lint-free cloths should be used.

Locating and non-locating bearings

The bearing seats in the housing are machined such that the bearings are movable and can thus function as non-locating bearings. Locating bearing arrangements can be achieved by the insertion of locating rings NFR on both sides of the bearing outer ring. Depending on the combination of housing and bearing, either 2, 4 or 6 locating rings will be required, see dimension tables.

Locating rings must be ordered separately.

Longer bearing life

In the case of FAG plummer block housings SNS, the life of the spherical roller bearings fitted is up to 50% higher than in the case of conventional plummer block housings. The increase in life is dependent on the application, the load and the bearing design. Calculation of the bearing life is based on the calculation software BEARINX. The reason for the longer bearing life is the optimum load distribution in the bearing that is achieved as a result of the new housing design, *Figure 1*.

Conventional plummer block housings are designed such that the bearing load is introduced into the housing locating face by means of a support area directly below the bearing, *Figure 1*, ②. If loading is in the main load direction, namely with an orientation vertical to the housing locating face, an unfavourable load distribution occurs in the bearing. Due to the narrow load zone, the load is distributed over only a small number of rolling elements, leading to a particularly high load maximum on the roller in the apex position.

In the case of plummer block housings SNS, a material recess below the bearing distributes the support area over two symmetrically arranged support faces, *Figure 1*, ④. This leads to a significant improvement in the load distribution in the bearing. The load zone is wider and the load is distributed more uniformly over several rolling elements. The maximum is now present on the two neighbouring rollers of the roller in the apex position and is reduced. This results in a significant increase in the fatigue life of the rolling bearings.

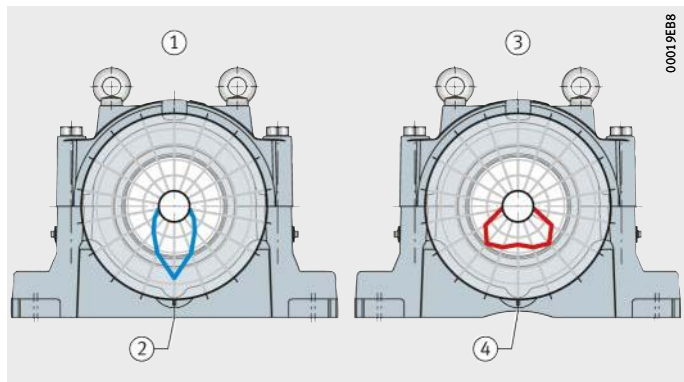

① Conventional plummer block housing with associated load distribution
② Support area directly below the bearing
③ FAG plummer block housing SNS with associated load distribution
④ Material recess below the bearing

Figure 1
Influence of housing design on the load distribution in the bearing

Advantages of the detailed design

A large number of details in the housing design that are systematically matched to practical application allows a particularly flexible and economical usage of plummer block housings SNS, *Figure 2*.

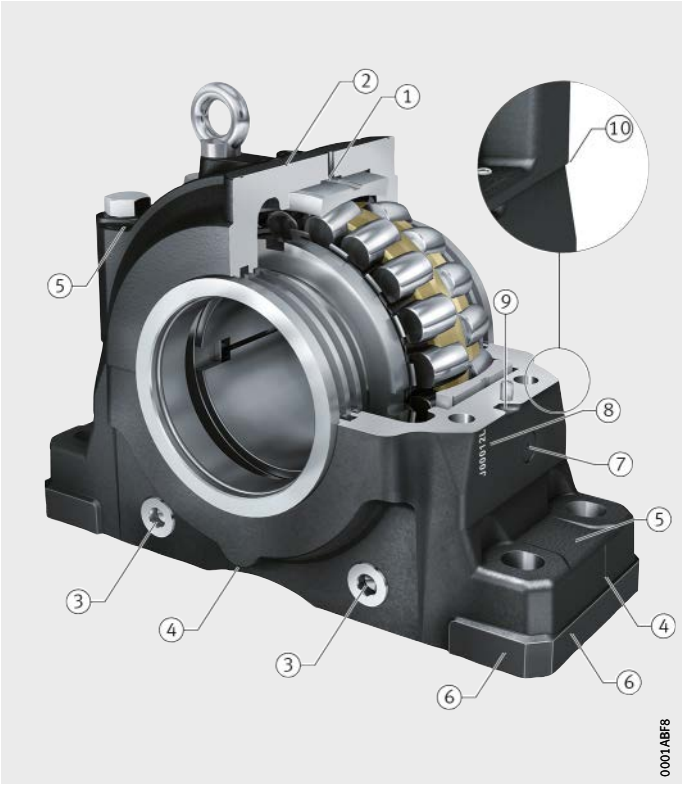

① Lubrication hole with long axial lubrication groove
② Pilot hole at predefined position for condition monitoring
③ Grease outlet holes
④ Indentations indicating shaft and bearing centres
⑤ Inclined run-off areas
⑥ Machined locating faces
⑦ Prepared mounting points for condition monitoring
⑧ Marking of housing halves
⑨ Dismounting notches
⑩ Projection of upper housing section

Figure 2
Advantages of detailed design

Lubrication hole with long axial lubrication groove

A lubrication hole with a long axial lubrication groove in the upper housing section ensures supply of lubricant irrespective of bearing position to all bearing series that can be fitted, *Figure 2*, ①. Suitable lubrication nipples are included in the scope of delivery.

Grease outlet holes

Grease outlet holes in the lower housing section allow the escape of used and superfluous grease during relubrication, *Figure 2*, ③.

Indentations indicating shaft and bearing centres

Indentations in the lower housing section indicate the shaft and bearing centres in the housing, *Figure 2*, ④. This allows rapid alignment and reduces mounting time.

Inclined run-off areas

Inclined run-off areas on the upper and lower housing section promote the removal of fluids and reduce deposits of contamination, *Figure 2*, ⑤. This leads to reduced cleaning work and a lower risk of corrosion.

Machined locating faces

Machined locating faces on the lower housing section allow precise alignment of the housing, *Figure 2*, ⑥. When the housing is painted, the locating faces are also provided with a universal paint coating. Since the locating faces are raised, strips can be used as an alignment aid. One-off alignment is sufficient to allow rapid interchange of the housing when necessary.

Prepared mounting points for condition monitoring

In order to allow the uncomplicated use of Condition Monitoring, the lower housing section has a connection facility on both sides for condition monitoring systems, *Figure 2*, ⑦. Due to the thread M6 and a flattened area on the diameter 26 mm, it is possible to directly connect FAG SmartCheck, a modular online measuring system for machine monitoring. Alternatively, other vibration sensors can also be connected. If neither of the two connection points is accessible as a result of the adjacent construction, a further suitable connection point on the upper section is indicated by a cast-in pilot hole, *Figure 2*, ②.

FAG SmartCheck must be ordered separately.
For detailed information, see TPI 214, FAG SmartCheck or www.FAG-SmartCheck.de.

Marking of housing halves

The upper housing section and lower housing section are matched to each other and must not be transposed with other housing halves. The serial numbering on both halves of the housing ensure their correct allocation, *Figure 2*, ⑧. Furthermore, the serial numbering allows traceability and simplified documentation.

Dismounting notches

Recessed dismounting notches on the interface of the housing halves make it easier to remove the upper housing section, *Figure 2*, ⑨.

Projection of upper housing section

The projection of the upper housing section prevents the collection of fluids and contaminants at the interface of the two housing halves, *Figure 2*, ⑩. This leads to reduced cleaning work and a lower risk of corrosion.

Seals and covers

For sealing of the bearing housings, the following standard seals are available:

- labyrinth seals and Taconite seals, each in a split and unsplit design. These seals are matched to the rectangular section annular slots on both sides of the housings SNS..-H and SNS..-Z.
- Bolt-on seals. These seals are screw mounted to the outside of housings SNS..-B.

If a housing closed on one side is required, the following covers are available:

- covers NDK, for housings SNS..-H and SNS..-Z
- covers BDK, for housings SNS..-B.

Seals and covers must be ordered specially. Seals are supplied individually. If a continuous shaft is present, two seals must be ordered.

Labyrinth seals NTS

Labyrinth seals NTS give non-contact sealing. They are therefore suitable for high circumferential velocities. The round cord made from fluoro rubber FKM pressed between the labyrinth ring and shaft is suitable for temperatures up to +200 °C.

The labyrinth seal allows shaft misalignment of up to 0,3° in both directions and is suitable for grease lubrication. If necessary, the labyrinth can be relubricated. For this purpose, a lubrication hole must be made in the upper housing section for each labyrinth seal. The optimum positions are indicated by cast-in pilot holes.

Taconite seals NTC

Taconite seals NTC are combined seals comprising a labyrinth seal and a V ring. These seals are suitable for extreme operating conditions in relation to contamination and dust. The V ring is made from NBR and is suitable for temperatures up to +100 °C.

The Taconite seal allows shaft misalignment of up to 0,3° in both directions and is suitable for grease lubrication. For relubrication, the seal is fitted with a lubrication nipple.

Split labyrinth seals NTSG

For plummer block housings SNS, labyrinth seals are also available in a split design. As a result, the work involved in replacing the seal can be considerably reduced, especially if a split bearing is also fitted.

The characteristics and operating limits correspond to those of the unsplit labyrinth seal NTS.

Split labyrinth seals NTSG are available in various sizes, see table, page 13. Other sizes are available by agreement.

Sizes

Sizes of split labyrinth seals for	
metric shaft	inch size shaft
NTSG34	NTSG34×515
NTSG36	NTSG36×607
NTSG38	–
NTSG40	–
NTSG44	–
NTSG48	–
NTSG52	–

Split Taconite seals NTCG

For plummer block housings SNS, Taconite seals are also available in a split design. As a result, the work involved in replacing the seal can be considerably reduced, especially if a split bearing is also fitted.

Split Taconite seals are supplied by agreement.

Bolt-on seals BTAC

Bolt-on seals BTAC are combined seals comprising a labyrinth seal and a V ring.

They are screw mounted to the outside of the housing and, unlike all other seals for plummer block housings SNS, are not inserted in the annular slots in the housing.

The seals are suitable for extreme operating conditions in relation to contamination and dust. The V ring is made from NBR and is suitable for temperatures up to +100 °C.

The Bolt-on seal allows shaft misalignment of up to 0,4° in both directions and is suitable for grease lubrication. For relubrication, the seal is fitted with a lubrication nipple.

The seals are available in the sizes BTAC34 to BTAC68.

When using Bolt-on seals, housings in a special design SNS..-B are required instead of the designs SNS..-H and SNS..-Z suitable for all other seals.

Covers NDK

Covers NDK are used with housings closed on one side. The covers fit in the rectangular section annular slots in the housings. They are suitable for temperatures up to +200 °C.

Covers BDK

Covers BDK are screw mounted to the outside of the housing. They are suitable for the housings SNS..-B designed for the Bolt-on seal.

Characteristics and operating limits

The characteristics and operating limits of the standard seals and covers are compared in an overview, see table, page 14.

Standard seals and covers for plummer block housings SNS

Seal or cover		Labyrinth seal
		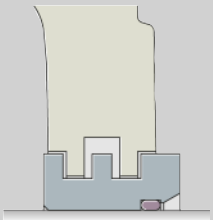
Designation		**NTS**
Material		Steel, FKM
Pieces per pack		1
Suitability for sealing against		
Dust		(+)
Fine solid particles		+
Coarse solid particles		+
Slivers		++
Spray liquids		–
Operating limits		
Long term temperature	°C	–20 to +200 (due to FKM)
	°F	–4 to +390 (due to FKM)
Circumferential velocity	m/s	No restriction
Misalignment	°	≦ 0,3
Low friction		++
Axial shaft displacement (suitability as non-locating bearing)		+
Vertical arrangement		–
Suitability for grease relubrication		+
Suitability for oil lubrication		–
Compatibility with sunlight		++
Preconditions		
Shaft diameter tolerance[1)]		h8 (h9)
Shaft roughness	µm	Ra 3,2

++ Highly suitable
\+ Suitable
(+) Suitable with restrictions
– Not suitable

[1)] The envelope condition Ⓔ applies here.

Taconite seal	Labyrinth seal, split	Bolt-on seal	Cover	
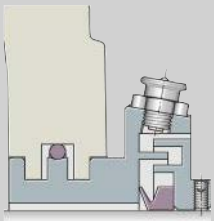	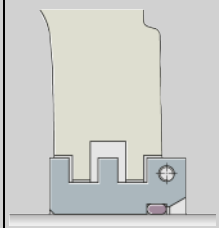	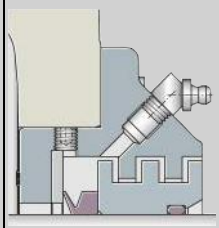	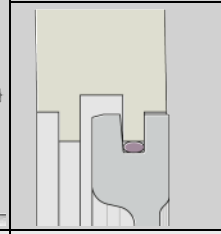	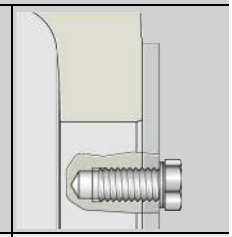
NTC	**NTSG**	**BTAC**	**NDK**	**BDK**
Steel, NBR	Steel, FKM	Steel, NBR	Steel, FKM	Steel
1	1	1	1	1
++	(+)	++	++	++
++	+	++	++	++
++	+	++	++	++
++	++	++	++	++
++	–	++	++	++
–30 to +100 (due to NBR)	–20 to +200 (due to FKM)	–30 to +100 (due to NBR)	–20 to +200 (due to FKM)	Not applicable
–22 to +210 (due to NBR)	–4 to +390 (due to FKM)	–22 to +210 (due to NBR)	–4 to +390 (due to FKM)	Not applicable
12	No restriction	12	Not applicable	Not applicable
≦ 0,3	≦ 0,3	≦ 0,4	Not applicable	Not applicable
+	++	+	Not applicable	Not applicable
+	+	+	Not applicable	Not applicable
(+)	–	–	++	++
+	+	++	++	++
(+)	–	–	+	–
++	++	++	++	++
h8 (h9)	h8 (h9)	h8 (h9)	Not applicable	Not applicable
Ra 3,2	Ra 3,2	Ra 3,2	Not applicable	Not applicable

Housing configurations

The modular structure of the plummer block housings SNS facilitates numerous possible combinations.

Based on the standard components, the housings can be combined as follows:

- location of bearings with a tapered bore by means of an adapter sleeve on a shaft of constant diameter or of bearings with a cylindrical bore directly on a stepped shaft
- sealing of housing by labyrinth seals (unsplit or split), Taconite seals (unsplit or split) or Bolt-on seals (in combination with housings of design SNS..-B)
- with a continuous shaft or a housing closed on one side
- design of the bearing arrangement as a locating bearing arrangement or a non-locating bearing arrangement
- spherical roller bearing in a split or unsplit design.

The resulting possible housing configurations, *Figure 3* to *Figure 12*, page 18 make it possible to fulfil various requirements on the bearing positions by means of standard components.

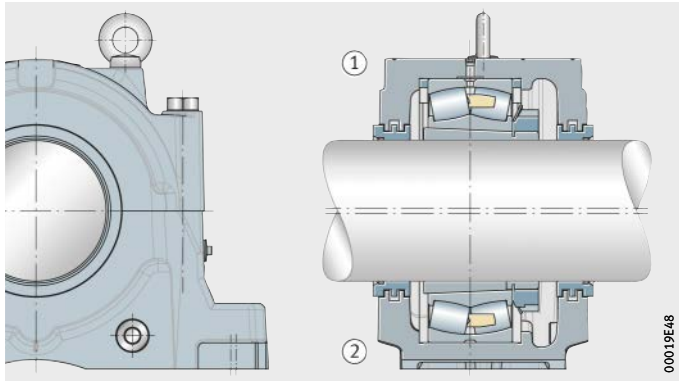

① Locating bearing
② Non-locating bearing

Figure 3
Plummer block housing SNS for bearing with tapered bore and adapter sleeve (2 labyrinth seals NTS)

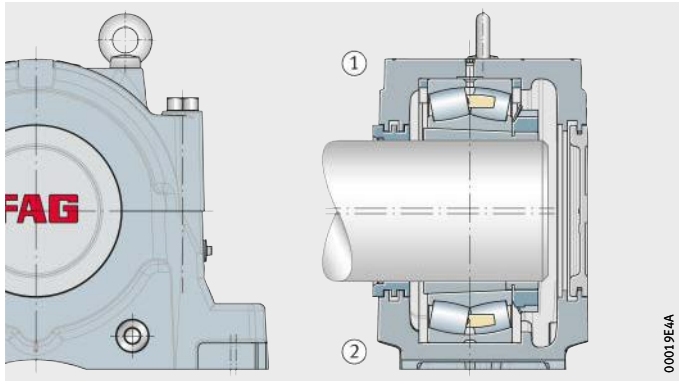

① Locating bearing
② Non-locating bearing

Figure 4
Plummer block housing SNS for bearing with tapered bore and adapter sleeve (labyrinth seal NTS and cover NDK)

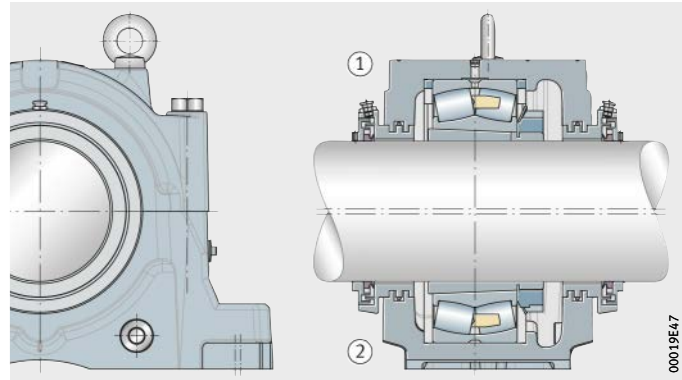

① Locating bearing
② Non-locating bearing

Figure 5
Plummer block housing SNS
for bearing with tapered bore and
adapter sleeve
(2 Taconite seals NTC)

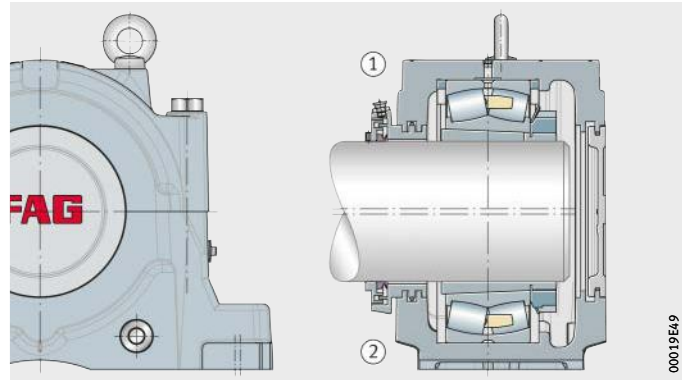

① Locating bearing
② Non-locating bearing

Figure 6
Plummer block housing SNS
for bearing with tapered bore and
adapter sleeve
(Taconite seal NTC and cover NDK)

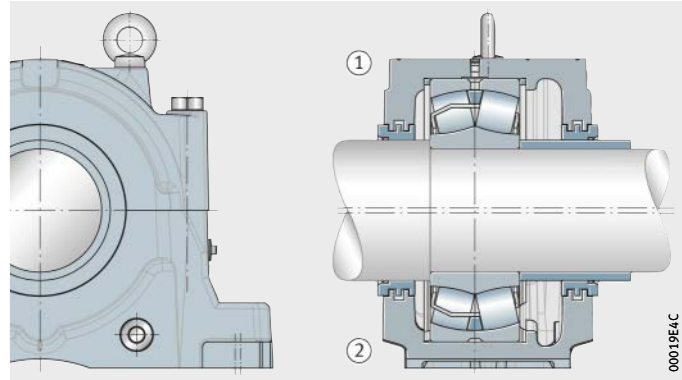

① Locating bearing
② Non-locating bearing

Figure 7
Plummer block housing SNS
for bearing with cylindrical bore
(2 labyrinth seals NTS)

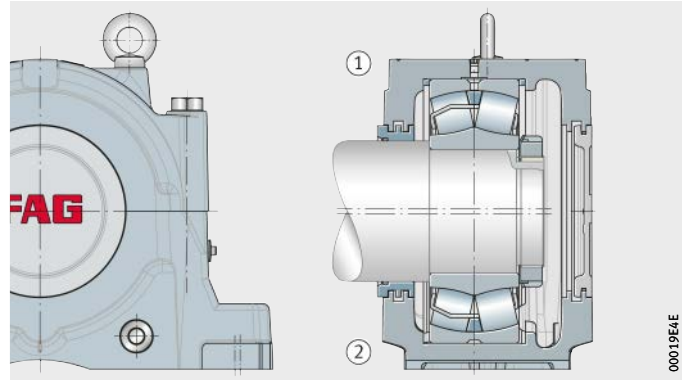

① Locating bearing
② Non-locating bearing

Figure 8
Plummer block housing SNS
for bearing with cylindrical bore
(labyrinth seal NTS and cover NDK)

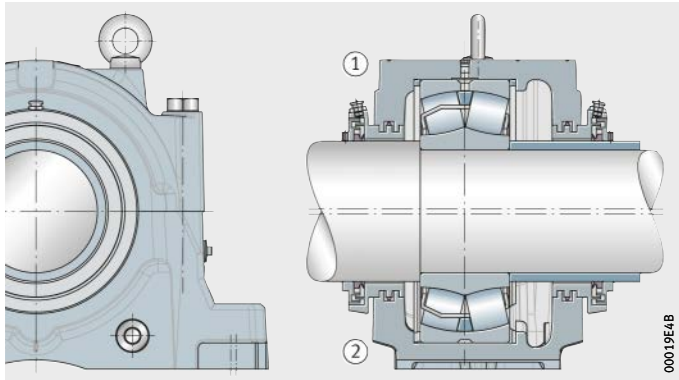

① Locating bearing
② Non-locating bearing

Figure 9
Plummer block housing SNS
for bearing with cylindrical bore
(2 Taconite seals NTC)

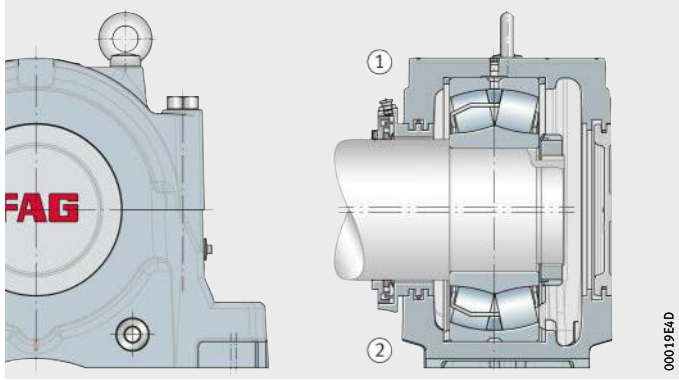

① Locating bearing
② Non-locating bearing

Figure 10
Plummer block housing SNS
for bearing with cylindrical bore
(Taconite seal NTC and cover NDK)

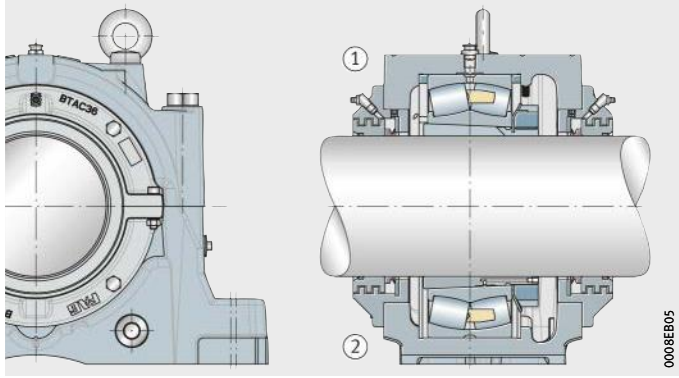

① Locating bearing
② Non-locating bearing

Figure 11
Plummer block housing SNS
for bearing with tapered bore and
adapter sleeve
(2 Bolt-on seals NTC)

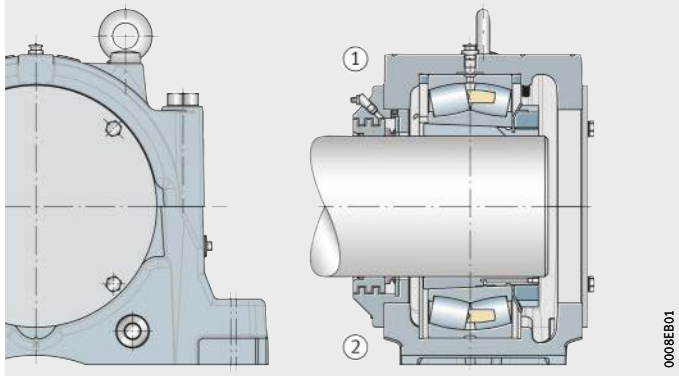

① Locating bearing
② Non-locating bearing

Figure 12
Plummer block housing SNS
for bearing with tapered bore and
adapter sleeve
(Bolt-on seal BTAC and cover BDK)

Mounting of split spherical roller bearings

In the case of plummer block housings SNS, an unsplit spherical roller bearing with a tapered bore and adapter sleeve can be replaced by a split spherical roller bearing, *Figure 13*.

① Locating bearing with unsplit bearing
② Non-locating bearing with unsplit bearing
③ Locating bearing with split bearing
④ Non-locating bearing with split bearing

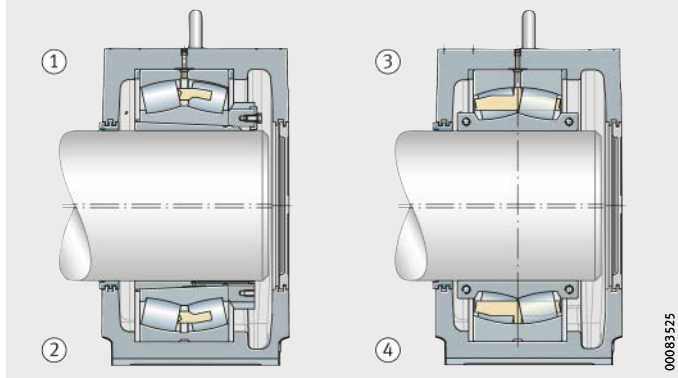

Figure 13
Plummer block housing SNS with split and unsplit spherical roller bearing

Combination with products for maintenance

The housings are suitable for connection of systems for preventive maintenance such as Condition Monitoring or automatic lubricators. Schaeffler offers a wide range of such products.

Further information on maintenance products

- Catalogue IS 1, Mounting and Maintenance of Rolling Bearings.

Lubrication

Plummer block housings SNS are principally suitable for grease lubrication. For initial lubrication, the basic rule is that the bearing should be filled with grease to 100% and the free volume of the housing to 60%. The free volume is the space that remains in the housing once the bearing, adapter sleeve, shaft and seals have been fitted.

The recommended grease quantity can also be stated in grams once the density of the grease has been taken into consideration, see table.

The recommended grease quantity in the table takes account of the following:

- filling of the free volume to 60%
- grease with a density of 0,9 g/cm^3.

Recommended grease quantity for selected housing/ bearing combinations

Housing		Bearing	Adapter sleeve	Free volume (100%) cm^3	Recommended grease quantity ≈ g
SNS22	SNS2264-H-D	22264..-K	H3064	27 550	14 900
SNS30	SNS3036-H-D	23036..-K	H3036	2 900	1 600
	SNS3038-H-D	23038..-K	H3038	3 900	2 250
	SNS3040-H-D	23040..-K	H3040	5 020	3 050
	SNS3044-H-D	23044..-K	H3044	5 770	4 260
	SNS3048-H-D	23048..-K	H3048	7 280	4 550
	SNS3052-H-D	23052..-K	H3052	9 930	6 750
	SNS3056-H-D	23056..-K	H3056	12 500	6 750
	SNS3060-H-D	23060..-K	H3060	14 800	8 000
	SNS3064-H-D	23064..-K	H3064	19 400	10 500
	SNS3068-H-D	23068..-K	H3068	24 000	13 000
	SNS3072-H-D	23072..-K	H3072	30 400	16 450
	SNS3076-H-D	23076..-K	H3076	32 000	17 300
	SNS3080-H-D	23080..-K	H3080	33 500	18 100
	SNS3084-H-D	23084..-K	H3084	35 000	18 900
	SNS3088-H-D	23088..-K	H3088	43 400	23 450
	SNS3092-H-D	23092..-K	H3092	56 600	30 600
	SNS3096-H-D	23096..-K	H3096	55 200	29 850
	SNS30/500-H-D	230/500..-K	H30/500	55 200	29 850
	SNS30/530-H-D	230/530..-K	H30/530	67 500	36 450

Recommended grease quantity for selected housing/ bearing combinations (continued)

Housing		Bearing	Adapter sleeve	Free volume (100%) cm³	Recommended grease quantity ≈ g
SNS31	SNS3134-H-D	23134..-K	H3134	2 900	1 600
	SNS3136-H-D	23136..-K	H3136	3 810	2 060
	SNS3138-H-D	23138..-K	H3138	5 030	2 720
	SNS3140-H-D	23140..-K	H3140	6 780	3 660
	SNS3144-H-D	23144..-K	H3144	7 520	4 060
	SNS3148-H-D	23148..-K	H3148	10 100	5 990
	SNS3152-H-D	23152..-K	H3152	11 650	6 300
	SNS3156-H-D	23156..-K	H3156	12 550	6 800
	SNS3160-H-D	23160..-K	H3160	17 200	9 300
	SNS3164-H-D	23164..-K	H3164	21 250	11 500
	SNS3168-H-D	23168..-K	H3168	27 550	14 900
	SNS3172-H-D	23172..-K	H3172	28 500	15 400
	SNS3176-H-D	23176..-K	H3176	28 300	15 300
	SNS3180-H-D	23180..-K	H3180	36 450	19 700
	SNS3184-H-D	23184..-K	H3184	45 550	24 600
	SNS3188-H-D	23188..-K	H3188	48 300	26 100
	SNS3192-H-D	23192..-K	H3192	52 000	28 100
	SNS3196-H-D	23196..-K	H3196	55 000	29 700
SNS32	SNS3234-H-D	23234..-K	H2334	5 350	2 900
	SNS3236-H-D	23236..-K	H2336	5 350	2 900
	SNS3238-H-D	23238..-K	H2338	6 500	3 510
	SNS3240-H-D	23240..-K	H2340	6 900	3 760
	SNS3244-H-D	23244..-K	H2344	10 000	5 400
	SNS3248-H-D	23248..-K	H2348	10 200	5 550
	SNS3252-H-D	23252..-K	H2352	15 500	8 400
	SNS3256-H-D	23256..-K	H2356	15 500	8 400
	SNS3260-H-D	23260..-K	H3260	19 000	10 300
	SNS3264-H-D	23264..-K	H3264	25 300	13 700
	SNS3268-H-D	23268..-K	H3268	25 000	13 500
	SNS3272-H-D	23272..-K	H3272	26 800	14 500
	SNS3276-H-D	23276..-K	H3276	38 600	20 850
	SNS3280-H-D	23280..-K	H3280	44 100	23 850
	SNS3284-H-D	23284..-K	H3284	45 000	24 350
	SNS3288-H-D	23288..-K	H3288	49 400	26 700

Information on the recommended grease quantity for other housing sizes is available by agreement.

In order to achieve a long operating life and high operational security of the bearing arrangement, we recommend the use of the rolling bearing greases Arcanol. These have been designed and tested for bearing arrangement engineering.

The recommended degree of filling for the greasing of bearings, as a function of the application and speed, may deviate from 100%.

Further information on the lubrication of rolling bearings

- TPI 168, Rolling Bearing Greases Arcanol
- TPI 176, Lubrication of Rolling Bearings.

Relubrication

If relubrication is carried out on bearings with a circumferential lubrication groove, the grease is introduced into the housing via the central lubrication hole, *Figure 14*, page 23, ①. In this type of relubrication, the grease acts directly on the bearing.

For the relubrication of bearings without a lubrication groove, two relubrication points are provided in the upper housing section, *Figure 14*, ②. One of the two points has a threaded hole, while the other is indicated by a cast-in pilot hole.

The lubrication holes and lubrication nipples provided for relubrication differ according to the design of the housing, see table. In the case of housings SNS..-H and SNS..-Z, the threaded holes are closed off by a screw plug. This must be removed and permanently replaced by one of the lubrication nipples supplied. In the case of housings SNS..-B, both taper type lubrication nipples are already fitted.

Lubrication holes and lubrication nipples

Housing	Thread	Lubrication nipple	Delivery quantity
SNS..-H SNS..-Z	M10×1	Button head lubrication nipple in accordance with DIN 3404-M10×1 (with dust cap)	1
		Taper type lubrication nipple in accordance with DIN 71412-AM10×1 (with dust cap)	1
SNS..-B	ISO 288-G1/4	Button head lubrication nipple in accordance with DIN 3404-A G1/4 St	2

Lubrication holes can be provided at two further points for relubrication of labyrinth seals, *Figure 14*, ③.

In order to prevent overgreasing, the screw plugs must be removed from the two grease outlet holes in the lower housing section for the duration of relubrication, *Figure 14*, ④. This allows the superfluous grease to escape. The grease outlet holes must then be closed off again using the screw plugs.

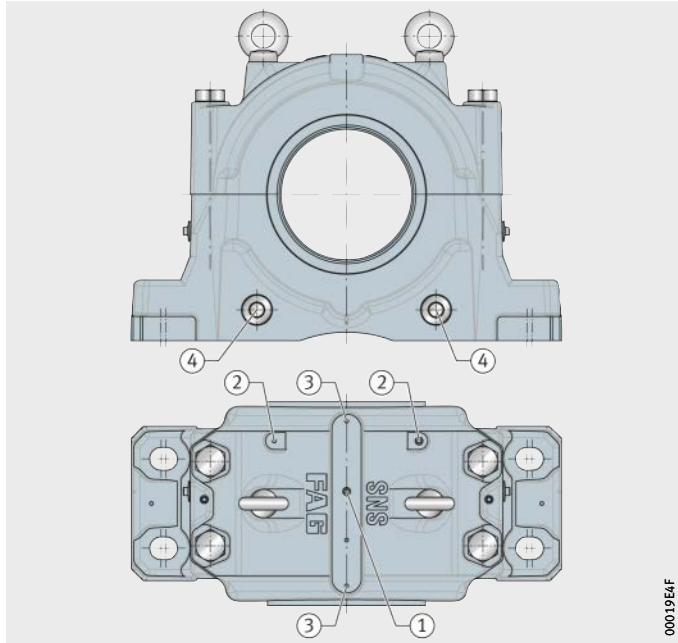

① Central lubrication hole, for bearings with lubrication groove

② Points for relubrication of bearings without lubrication groove

③ Points for relubrication of labyrinth seals

④ Grease outlet holes

Figure 14
Points for relubrication

In the interests of the environment, controlled metering must be ensured. Any grease that escapes via the grease outlet holes must be collected by means of a suitable device.

If unfavourable environmental conditions are present, there is therefore a risk of contamination being carried into the housing when the grease outlet holes are opened.

Automatic lubricators

The plummer block housings SNS can also be connected directly to automatic lubricators, such as the FAG CONCEPT8, *Figure 15*.

Figure 15
Plummer block housing SNS with automatic lubricator FAG CONCEPT8

Further information on FAG CONCEPT8

- WL 80 382, FAG CONCEPT8.

Design and safety guidelines
Load carrying capacity

The permissible load on the housing is dependent on:

- the strength of the housing
- the strength of the connecting screws
- the load carrying capacity of the bearing
- the load direction.

Guide values are given for the rupture load of the housings and the maximum load carrying capacity of the screws connecting the upper and lower sections of the housing, *Figure 16* and table, page 26. The guide values are valid for purely static loading.

The values in the table apply if the flatness of the mounting surface in accordance with DIN EN ISO 1101 corresponds to tolerance grade IT7 in accordance with DIN EN ISO 286-1 (measured across the diagonal). A precondition for supporting loads is that the housing base surface is completely and rigidly supported.

When determining the permissible static load, safety factors must be applied. For general machine building, the safety factor 6 relative to the housing rupture load is normally applied. Based on the precise calculation of the housing rupture loads using the Finite Element method and the use as standard of spheroidal graphite cast iron as the housing material, the safety factor 5 is sufficient for plummer block housings SNS.

A safety factor is not required for the values given for the load carrying capacity of the connecting screws.

If the housing is subjected to axial load, the permissible axial load of the bearing fitted must be taken into consideration. If the bearing is located on the shaft using an adapter sleeve, the axial retaining force of the bearing and adapter sleeve must also be taken into consideration.

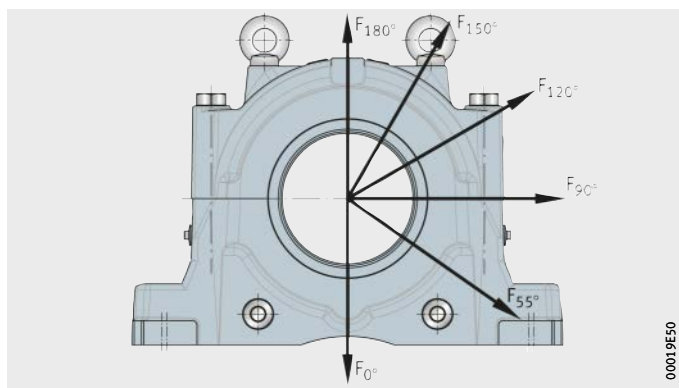

Figure 16
Load directions F for guide values for housing rupture load and maximum load carrying capacity of connecting screws

Guide values for housing rupture load and maximum load carrying capacity of connecting screws, as well as tightening torques

Housing					Housing rupture loads[1] in load direction F	
SNS22	SNS30	SNS31	SNS32	SNS40	0° kN	55° kN
–	SNS3036	SNS3134	–	–	4 050	4 540
–	SNS3038	SNS3136	–	–	4 400	4 940
–	SNS3040	SNS3138	SNS3234	–	4 880	5 480
–	–	–	SNS3236	–	4 880	5 480
–	SNS3044	SNS3140	SNS3238	–	5 800	6 500
–	SNS3048	SNS3144	SNS3240	–	6 240	7 560
–	SNS3052	SNS3148	–	–	7 330	8 550
–	–	–	SNS3244	–	7 330	8 550
–	SNS3056	SNS3152	–	–	8 740	9 810
–	–	–	SNS3248	–	8 740	9 810
–	SNS3060	SNS3156	–	–	9 200	10 320
–	SNS3064	SNS3160	–	–	10 150	11 390
–	–	–	SNS3252	–	10 150	11 390
–	–	–	SNS3256	–	10 150	11 390
–	SNS3068	SNS3164	–	–	11 410	12 810
–	SNS3072	–	–	–	11 410	12 810
–	–	–	SNS3260	–	11 410	12 810
SNS2264	SNS3076	SNS3168	–	SNS4076	13 300	14 930
–	–	–	SNS3264	–	13 300	14 930
–	SNS3080	SNS3172	–	–	14 740	16 540
–	–	–	–	SNS4080	14 740	16 540
–	SNS3084	SNS3176	–	–	15 940	17 890
–	–	–	SNS3268	–	15 940	17 890
–	–	–	–	SNS4084	15 940	17 890
–	SNS3088	SNS3180	–	–	18 490	20 750
–	–	–	SNS3272	–	18 490	20 750
–	–	–	–	SNS4088	18 490	20 750
–	SNS3092	SNS3184	–	SNS4092	20 180	22 650
–	SNS3096	–	–	SNS4096	20 180	22 650
–	–	–	SNS3276	–	20 180	22 650
–	SNS30/500	SNS3188	–	–	21 940	24 620
–	–	–	SNS3280	–	21 940	24 620
–	–	–	–	SNS40/500	21 940	24 620
–	–	SNS3192	–	–	24 150	27 100
–	–	–	SNS3284	–	24 150	27 100
–	SNS30/530	SNS3196	–	SNS40/530	26 080	29 270
–	–	–	SNS3288	–	26 080	29 270

[1] For housings made from spheroidal graphite cast iron GJS-400-15 (suffix D).

					Connecting screws					
					Screws in accordance with DIN EN ISO 4014	Tightening torque	Maximum load carrying capacity of the four screws with contact between parting surfaces in load direction F			
90°	120°	150°	180°	axial	Material 8.8		90°	120°	150°	180°
kN	kN	kN	kN	kN		Nm	kN	kN	kN	kN
3 040	1 650	1 190	1 220	1 170	M24	559	1 380	760	618	725
3 300	1 800	1 300	1 330	1 270	M24	559	1 370	760	615	723
3 660	1 990	1 440	1 470	1 410	M24	559	1 500	830	670	790
3 660	1 990	1 440	1 470	1 410	M24	559	1 500	830	670	790
4 350	2 370	1 700	1 750	1 670	M24	559	1 510	836	677	796
5 070	2 880	2 360	2 380	1 880	M24	559	1 484	820	664	781
5 720	3 190	2 470	2 510	2 080	M30	1 118	2 380	1 315	1 065	1 252
5 720	3 190	2 470	2 510	1 880	M30	1 118	2 380	1 315	1 065	1 252
6 550	3 570	2 580	2 640	2 520	M30	1 118	2 372	1 310	1 061	1 250
6 550	3 570	2 580	2 640	1 410	M30	1 118	2 372	1 310	1 061	1 250
6 900	3 760	2 710	2 780	2 652	M30	1 118	2 330	1 290	1 040	1 230
7 620	4 150	3 000	3 070	2 810	M30	1 118	2 220	1 230	990	1 170
7 620	4 150	3 000	3 070	2 230	M30	1 118	2 220	1 230	990	1 170
7 620	4 150	3 000	3 070	2 230	M30	1 118	2 220	1 230	990	1 170
8 560	4 660	3 370	3 450	3 355	M30	1 118	2 220	1 230	1 000	1 170
8 560	4 660	3 370	3 450	3 355	M30	1 118	2 200	1 230	1 000	1 170
8 560	4 660	3 370	3 450	2 900	M30	1 118	2 200	1 230	1 000	1 170
9 980	5 430	3 930	4 020	3 480	M36	1 945	3 260	1 800	1 460	1 720
9 980	5 430	3 930	4 020	2 690	M36	1 945	3 260	1 800	1 460	1 720
11 060	6 020	4 350	4 450	4 250	M36	1 945	3 100	1 710	1 390	1 630
11 060	6 020	4 350	4 450	4 295	M36	1 945	3 100	1 710	1 390	1 630
11 960	6 510	4 710	4 820	4 600	M36	1 945	3 100	1 710	1 390	1 630
11 960	6 510	4 710	4 820	3 628	M36	1 945	3 100	1 710	1 390	1 630
11 960	6 510	4 710	4 820	4 200	M36	1 945	3 100	1 710	1 390	1 630
13 870	7 560	5 460	5 590	5 330	M36	1 945	3 200	1 770	1 430	1 690
13 870	7 560	5 460	5 590	3 200	M36	1 945	3 200	1 770	1 430	1 690
13 870	7 560	5 460	5 590	4 535	M36	1 945	3 200	1 770	1 430	1 690
15 140	8 250	5 960	6 100	5 650	M42	2 794	4 110	2 270	1 840	2 160
15 140	8 250	5 960	6 100	5 650	M42	2 794	4 110	2 270	1 840	2 160
15 140	8 250	5 960	6 100	4 530	M42	2 794	4 110	2 270	1 840	2 160
16 460	8 970	6 480	6 630	6 320	M42	2 794	4 110	2 270	1 840	2 160
16 460	8 970	6 480	6 630	4 360	M42	2 794	4 110	2 270	1 840	2 160
16 460	8 970	6 480	6 630	6 350	M42	2 794	4 110	2 270	1 840	2 160
18 120	9 870	7 130	7 300	6 962	M42	2 794	4 160	2 300	1 860	2 190
18 120	9 870	7 130	7 300	4 747	M42	2 794	4 160	2 300	1 860	2 190
19 560	10 660	7 700	7 880	7 420	M42	2 794	4 160	2 300	1 860	2 190
19 560	10 660	7 700	7 880	4 500	M42	2 794	4 160	2 300	1 860	2 190

Permissible shaft end designs

In the case of a housing closed on one side, the length of the shaft in the housing must be restricted such that no contact occurs between the shaft and the cover. In this case, the displacement facility of the bearing in a non-locating bearing arrangement must be taken into consideration. The basis for determining the permissible length of the shaft is the spacing between the centre of the bearing seat and the cover, *Figure 17* and table.

a_d = spacing between centre of bearing seat and cover

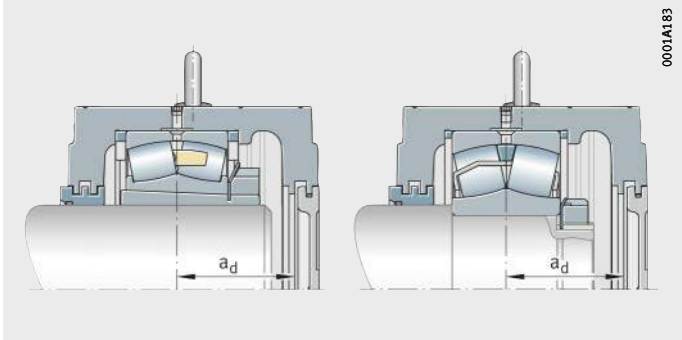

Figure 17
Spacing between centre of bearing seat and cover

Spacing between centre of bearing seat and cover

Housing					Spacing
SNS22	SNS30	SNS31	SNS32	SNS40	a_d mm
–	SNS3036	SNS3134	–	–	107,5
–	SNS3038	SNS3136	–	–	113,5
–	SNS3040	SNS3138	SNS3234	–	117,5
–	–	–	SNS3236	–	117,5
–	SNS3044	SNS3140	SNS3238	–	127,5
–	SNS3048	SNS3144	SNS3240	–	133,5
–	SNS3052	SNS3148	SNS3244	–	141,5
–	SNS3056	SNS3152	SNS3248	–	151,5
–	SNS3060	SNS3156	–	–	154,5
–	SNS3064	SNS3160	SNS3252	–	175,5
–	–	–	SNS3256	–	175,5
–	SNS3068	SNS3164	SNS3260	–	186,5
–	SNS3072	–	–	–	186,5
SNS2264	SNS3076	SNS3168	SNS3264	SNS4076	202,5
–	SNS3080	SNS3172	SNS3268	SNS4080	208,5
–	SNS3084	SNS3176	–	SNS4084	208,5
–	SNS3088	SNS3180	SNS3272	SNS4088	223,5
–	SNS3092	SNS3184	SNS3276	SNS4092	243,5
–	SNS3096	SNS3188	SNS3280	SNS4096	243,5
–	SNS30/500	–	–	SNS40/500	243,5
–	SNS30/530	SNS3192	SNS3284	SNS40/530	248,5
–	–	SNS3196	SNS3288	–	248,5

Mounting and dismounting

Correct mounting has a decisive influence on the achievable bearing life. For this reason, careful attention must be paid to the following information.

Surface quality of the mounting surface

The requirements for the surface on which the housing is to be mounted are as follows:

- sufficiently robust to withstand the static and dynamic loads occurring in operation over the long term
- surface roughness Ra ≦ 12,5
- flatness tolerance to IT7, measured across the diagonal
- free from colour.

Compliance with these requirements is the basis for the operational security of the housing and a long operating life of the bearing fitted.

Horizontal fixing of the housing

In addition to the foot screws, horizontal fixing of the housing is necessary if one of the following conditions is fulfilled:

- The load angle is between 55° and 120°, *Figure 16*, page 25.
- Axial load is present.

It is recommended that the horizontal fixing is carried out by means of stops in the load direction. The lower housing section is therefore provided with machined locating faces.

Eye bolts

The upper housing section has 2 eye bolts in accordance with DIN 580. These are intended as locating points for mounting and dismounting of the housing. The load carrying capacity of the eye bolts allows lifting of the housing including a bearing fitted in the housing.

Eye bolts must always be screwed fully into the housing.

Eye bolts should only be used for lifting the housing including the bearing fitted in the housing. During lifting by means of the eye bolts, no other machine or plant components should be connected to the housing.

Foot screws

Foot screws, see table, are used to screw mount housings to the mounting surface.

Foot screws are not included in the scope of delivery of the housings.

Nominal sizes of foot screws for plummer block housings SNS

Housing					Nominal screw size
SNS22	SNS30	SNS31	SNS32	SNS40	
–	SNS3036	SNS3134	SNS3234	–	M24
–	SNS3038	SNS3136	SNS3236	–	
–	SNS3040	SNS3138	–	–	
–	SNS3044	SNS3140	SNS3238	–	M30
–	SNS3048	SNS3144	SNS3240	–	
–	SNS3052	SNS3148	SNS3244	–	
SNS2264	SNS3056	SNS3152	SNS3248	SNS4076	M36
–	SNS3060	SNS3156	SNS3252	SNS4080	
–	SNS3064	SNS3160	SNS3256	SNS4084	
–	SNS3068	SNS3164	SNS3260	–	
–	SNS3072	SNS3168	SNS3264	–	
–	SNS3076	SNS3172	SNS3268	–	
–	SNS3080	SNS3176	–	–	
–	SNS3084	–	–	–	
–	SNS3088	SNS3180	SNS3272	SNS4088	M42
–	SNS3092	SNS3184	SNS3276	SNS4092	
–	SNS3096	SNS3188	SNS3280	SNS4096	
–	SNS30/500	SNS3192	SNS3284	SNS40/500	
–	SNS30/530	SNS3196	SNS3288	SNS40/530	M48

The following table contains tightening torques for metric coarse pitch threads in accordance with DIN 13, DIN 962 and DIN ISO 965-2 as well as head contact dimensions in accordance with DIN EN ISO 4014, DIN EN ISO 4017, DIN EN ISO 4032, DIN EN ISO 4762, DIN 6912, DIN 7984, DIN 7990 and DIN EN ISO 8673.

The maximum tightening torques are valid with 90% utilisation of the yield stress of the screw material 8.8 and a friction factor of 0,14. We recommend that foot screws should be tightened to approx. 70% of these values, see table.

Tightening torques for foot screws with metric thread in accordance with DIN 13, DIN ISO 962 and DIN ISO 965-2

Nominal screw diameter	Maximum tightening torque Nm	Recommended tightening torque Nm
M24	798	550
M30	1 597	1 100
M36	2 778	1 950
M42	3 991	2 750
M48	6 021	4 250

Location of bearings with a tapered bore on the shaft

Bearings with a tapered bore are located on the shaft in plummer block housings SNS by means of adapter sleeves. The adapter sleeve is slid onto the shaft first and then the bearing is slid onto the taper of the adapter sleeve. As a result, the radial internal clearance of the bearing is reduced. At the same time, a radial preload occurs between the bearing inner ring, adapter sleeve and shaft, ensuring the rigid seating of the bearing on the shaft.

FAG hydraulic nuts can be used to aid the pressing-on operation. The reduction in the radial internal clearance is determined in the case of spherical roller bearings by measurement using feeler gauges.

The values given for the reduction in the radial internal clearance and the drive-up distance on the taper lead to rigid seating of the bearing on the shaft, see table.

Reduction in the radial internal clearance and drive-up distance on the taper 1:12

Nominal bearing bore diameter		Reduction in radial internal clearance		Drive-up distance on taper 1:12				Minimum radial internal clearance after mounting, control value for		
d				Shaft		Sleeve		Group N	Group 3	Group 4
mm		mm		mm		mm		mm	mm	mm
over	incl.	min.	max.	min.	max.	min.	max.	min.	min.	min.
100	120	0,05	0,07	0,7	1,1	0,8	1,2	0,05	0,065	0,1
120	140	0,065	0,09	1,1	1,4	1,2	1,5	0,055	0,08	0,11
140	160	0,075	0,1	1,2	1,6	1,3	1,7	0,055	0,09	0,13
160	180	0,08	0,11	1,3	1,7	1,4	1,9	0,06	0,1	0,15
180	200	0,09	0,13	1,4	2	1,5	2,2	0,07	0,1	0,16
200	225	0,1	0,14	1,6	2,2	1,7	2,4	0,08	0,12	0,18
225	250	0,11	0,15	1,7	2,4	1,8	2,6	0,09	0,13	0,2
250	280	0,12	0,17	1,9	2,6	2	2,9	0,1	0,14	0,22
280	315	0,13	0,19	2	3	2,2	3,2	0,11	0,15	0,24
315	355	0,15	0,21	2,4	3,4	2,6	3,6	0,12	0,17	0,26
355	400	0,17	0,23	2,6	3,6	2,9	3,9	0,13	0,19	0,29
400	450	0,2	0,26	3,1	4,1	3,4	4,4	0,13	0,2	0,31
450	500	0,21	0,28	3,3	4,4	3,6	4,8	0,16	0,23	0,35
500	560	0,24	0,32	3,7	5	4,1	5,4	0,17	0,25	0,36
560	630	0,26	0,35	4	5,4	4,4	5,9	0,2	0,29	0,41

Location of bearings with a cylindrical bore on the shaft

Bearings with a cylindrical bore are mounted in plummer block housings SNS on a stepped shaft. The bearing and then a spacer sleeve are slid onto the shaft. The outside diameter of the spacer sleeve must be selected such that it corresponds to the larger diameter of the stepped shaft. The seal is then slid onto the spacer sleeve. In the case of a housing closed on one side, a spacer sleeve is not used.

Spacer sleeves are not included in the scope of delivery of the housings.

Further information on mounting of bearings

- Machining tolerances for shafts:
  Catalogue HR 1, Rolling Bearings
- Detailed information on mounting of rotary bearings:
  MH 1, Mounting Handbook.

Mounting manual

The information on mounting and dismounting in this publication is aimed at the designer in order that he can take account, as early as the design stage, of all the requirements relating to mounting. There is a separate mounting manual for mounting personnel.

The mounting manual contains all the information that is required for safe, correct mounting.

Further information on mounting of housings

- Questions on the mounting procedure:
  industrial-services@schaeffler.com

Accuracy

The bearing seat in split plummer block housings SNS is machined to the tolerance class G7.

By agreement, the housings can also be supplied with other tolerance classes for the bearing seat. If necessary, please contact us.

Ordering examples

When ordering a split plummer block housing SNS, the seals, covers and locating rings suitable for the specific application must be ordered separately. The bearing is normally ordered at the same time. The appropriate combination of these components is given in the dimension tables.

Plummer block housings SNS are available as standard in the form of a non-locating bearing design. These can be converted into locating bearing arrangements through the insertion of locating rings NFR.

Designation structure

The designation structure of plummer block housings SNS is based on the designation structure of rolling bearings. The designation of the housing series is followed by the bearing size and finally the designation for the design variants and material, see table and *Figure 18*.

Designation structure of plummer block housings SNS

Feature		Code	Description
①	Series	SNS	Split plummer block housing SNS
②	ISO dimension series of bearing	30	ISO dimension series 22, 23, 30 and 40
		31	ISO dimension series 22, 23 and 31
		32	ISO dimension series 22 and 32
		40	ISO dimension series 40
③	Housing size	36	For bearings of ISO dimension series 30, 31 and 32: ■ Bore code of bearing
		/530	For bearings of ISO dimension series 30, 31 and 32: ■ Bore code of bearing
④	Housing design	H	Main design, see table, page 34
		Z	Additional design, see table, page 34
		B	Design for Bolt-on seal
⑤	Housing material	D	Spheroidal graphite cast iron

Figure 18
Designation structure of plummer block housings SNS, example

Split plummer block housings SNS

Plummer block housings SNS with labyrinth or Taconite seals are available in the housing designs H and Z. Spherical roller bearings can be fitted, as a function of the bearing series, in one of the two housing designs, see table.

Allocation of housing designs H and Z to bearing types

Housing design	Bearing series
H	Spherical roller bearings with tapered bore and adapter sleeve
	Split spherical roller bearings
	Following spherical roller bearings with cylindrical bore: 22232, 22234, 22252, 22272, 22326, 22328, 22330, 22332, 22334, 22338, 22344, 22348, 22352, 22356, 23232, 24036
Z	Spherical roller bearings with cylindrical bore, not allocated to housing design H

The designations of standard seals, covers and locating rings give an indication of the series and size, see tables and *Figure 19* to *Figure 21*.

Designation structure of standard seals

Feature		Code	Description
①	Series	NTS	Labyrinth seal
		NTC	Taconite seal
		NTSG	Split labyrinth seal
		NTCG	Split Taconite seal
		BTAC	Bolt-on seal
②	Dimension series	36	Dimension series 36
③	Shaft diameter	No further indications	Standard shaft diameter of dimension series
		/125	Metric shaft diameter: 125 mm
		X415	Inch size shaft diameter: 4 inch + 15 · $^{1}/_{16}$ inch = $4^{15}/_{16}$ inch

Figure 19
Designation structure of standard seals, examples

Designation structure of covers

Feature		Code	Description
①	Series	NDK	Cover for plummer block housing SNS..-H and SNS..-Z
		BDK	Cover for plummer block housing SNS..-B
②	Dimension series	36	Dimension series 36

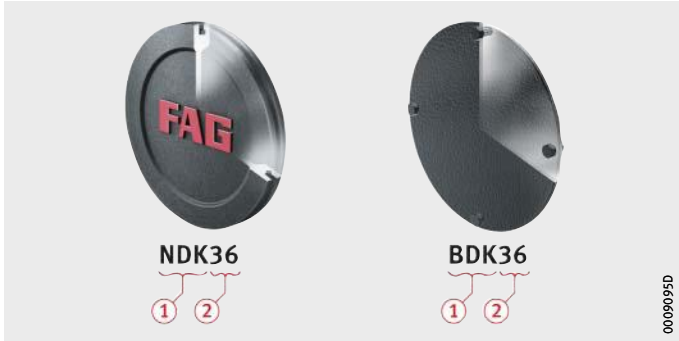

Figure 20
Designation structure of covers, example

Designation structure of locating rings

Feature		Code	Description
①	Series	NFR	Locating ring
②	Outside diameter	280	Outside diameter 280 mm
③	Width	10	Width 10 mm

Figure 21
Designation structure of locating rings, example

Examples

The ordering examples show the construction of an order for selected housing combinations and the appropriate bearings. Allocation of housings, bearings and accessories for all housing sizes, see dimension table.

Example 1

Plummer block housing SNS made from spheroidal graphite cast iron, closed on one side, spherical roller bearing 23136-E1A-K-M as locating bearing, location by means of adapter sleeve on shaft diameter 160 mm, labyrinth seal.

Order	1 plummer block housing	SNS3136-H-D
	1 spherical roller bearing	23136-E1A-K-M
	1 adapter sleeve	H3136-HG
	2 locating rings	NFR300/10
	1 cover	NDK36
	1 labyrinth seal	NTS36

Example 2

Plummer block housing SNS made from spheroidal graphite cast iron, continuous shaft, spherical roller bearing 23136-E1A-K-M as non-locating bearing, location by means of adapter sleeve on shaft diameter 160 mm, Taconite seal.

Order	1 plummer block housing	SNS3136-H-D
	1 spherical roller bearing	23136-E1A-K-M
	1 adapter sleeve	H3136-HG
	2 Taconite seals	NTC36

Example 3

Plummer block housing SNS made from spheroidal graphite cast iron, closed on one side, spherical roller bearing 23136-E1A-K-M as non-locating bearing, location by means of adapter sleeve on shaft diameter 160 mm, Bolt-on seal.

Order	1 plummer block housing	SNS3136-B-D
	1 spherical roller bearing	23136-E1A-K-M
	1 adapter sleeve	H3136-HG
	1 cover	BDK36
	1 Bolt-on seal	BTAC36

Plummer block housings

SNS, split
For spherical roller bearings with tapered bore and adapter sleeve
Metric shaft

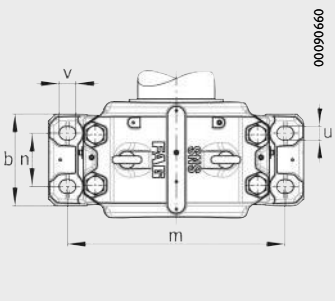

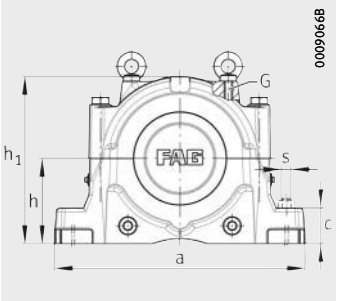

Dimension table · Dimensions in mm

Shaft	Housing Dimensions														Spherical roller bearing and accessories	
d_1	h	h_1	g	b	c	a	m	n	v	u	s	D	k	e	Bearing	Adapter sleeve
115	170	333	230	180	70	510	430	100	34	28	M24	280	108	14	**22326..-K**	H2326
125	180	353	240	190	75	530	450	110	34	28	M24	300	116	15	**22328..-K**	H2328
135	190	375	260	210	80	560	480	120	34	28	M24	320	124	10	**22330..-K**	H2330
140	180	353	240	190	75	530	450	110	34	28	M24	290	115	15	**22232..-K**	H3132(-HG)
140	210	411	280	230	85	610	510	130	42	35	M30	340	132	10	**22332..-K**	H2332(-HG)
140	180	353	240	190	75	530	450	110	34	28	M24	290	115	15	**23232..-K**	H2332(-HG)
150	190	375	260	210	80	560	480	120	34	28	M24	310	122	10	**22234..-K**	H3134(-HG)
150	220	434	290	240	90	640	540	140	42	35	M30	360	140	12	**22334..-K**	H2334(-HG)
150	170	333	230	180	70	510	430	100	34	28	M24	280	108	14	**23134..-K**	H3134(-HG)
150	170	333	230	180	70	510	430	100	34	28	M24	280	108	14	**231SM150-MA**[1]	–
150	190	375	260	210	80	560	480	120	34	28	M24	310	122	10	**23234..-K**	H2334(-HG)
160	190	375	260	210	80	560	480	120	34	28	M24	320	124	10	**22236..-K**	H3136(-HG)
160	170	333	230	180	70	510	430	100	34	28	M24	280	108	14	**23036..-K**	H3036(-HG)
160	170	333	230	180	70	510	430	100	34	28	M24	280	108	14	**230SM160-MA**[1]	–
160	180	353	240	190	75	530	450	110	34	28	M24	300	116	15	**23136..-K**	H3136(-HG)
160	180	353	240	190	75	530	450	110	34	28	M24	300	116	15	**231SM160-MA**[1]	–
160	190	375	260	210	80	560	480	120	34	28	M24	320	124	10	**23236..-K**	H2336(-HG)
170	210	411	280	230	85	610	510	130	42	35	M30	340	132	10	**22238..-K**	H3138(-HG)
170	240	474	310	260	95	700	600	150	42	35	M30	400	148	12	**22338..-K**	H2338(-HG)
170	180	353	240	190	75	530	450	110	34	28	M24	290	115	15	**23038..-K**	H3038(-HG)
170	180	353	240	190	75	530	450	110	34	28	M24	290	115	15	**230SM170-MA**[1]	–
170	190	375	260	210	80	560	480	120	34	28	M24	320	124	10	**23138..-K**	H3138(-HG)
170	190	375	260	210	80	560	480	120	34	28	M24	320	124	10	**231SM170-MA**	–
170	210	411	280	230	85	610	510	130	42	35	M30	340	132	10	**23238..-K**	H2338(-HG)

① Locating bearing; ② Non-locating bearing

1) Split bearing in associated housing has restricted usability. Please ask for further information.

2) Alternatively also available with split labyrinth seal NTSG.

3) With NTSG: width g_L increased by 16 mm.

4) With NTSG: width g_{LD} increased by 8 mm.

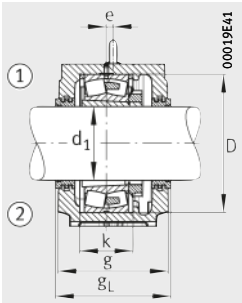

Labyrinth seal NTS

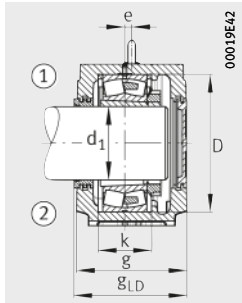

Labyrinth seal NTS
Cover NDK

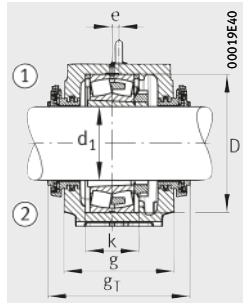

Taconite seal NTC

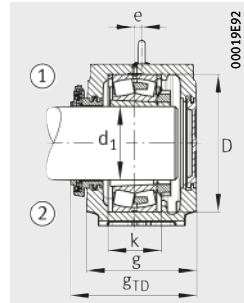

Taconite seal NTC
Cover NDK

									Housing		
Locating ring		Labyrinth seal			Taconite seal			Cover	G	Mass	Designation
	Quantity		g_L mm	g_{LD} mm		g_T mm	g_{TD} mm			m ≈ kg	
NFR280/7,5	2	NTS34/115	241	235,5	NTC34/115	299	264	NDK34	M16	75	**SNS3134-H-D**
NFR300/7	2	NTS36/125	251	245,5	NTC36/125	310	274,5	NDK36	M16	83	**SNS3136-H-D**
NFR320/8	2	NTS38/135	271	265,5	NTC38/135	330	294,5	NDK38	M20	102	**SNS3138-H-D**
NFR290/17,5	2	NTS38/140	251	245,5	NTC38/140	312	275,5	NDK38	M16	86	**SNS3038-H-D**
NFR340/9	2	NTS40/140	291	285,5	NTC40/140	347	313	NDK40	M20	133	**SNS3140-H-D**
NFR290/5,5	2	NTS38/140	251	245,5	NTC38/140	312	275,5	NDK38	M16	86	**SNS3038-H-D**
NFR310/18	2	NTS40/150	271	265,5	NTC40/150	326	293	NDK40	M20	105	**SNS3040-H-D**
NFR360/10	2	NTS48/150	301	295,5	NTC48/150	380	335	NDK48	M20	148	**SNS3048-H-D**
NFR280/10	2	NTS34[2]	241[3]	235,5[4]	NTC34	299	264,5	NDK34	M16	75	**SNS3134-H-D**
NFR280/10	2	NTS34[2]	241[3]	235,5[4]	NTC34	299	264,5	NDK34	M16	75	**SNS3134-H-D**
NFR310/6	2	NTS40/150	271	265,5	NTC40/150	327	293	NDK40	M20	105	**SNS3234-H-D**
NFR320/19	2	NTS38/160	271	265,5	NTC38/160	329	294,5	NDK38	M20	102	**SNS3138-H-D**
NFR280/17	2	NTS36[2]	241[3]	235,5[4]	NTC36	304	267	NDK36	M16	74	**SNS3036-H-D**
NFR280/17	2	NTS36[2]	241[3]	235,5[4]	NTC36	304	267	NDK36	M16	74	**SNS3036-H-D**
NFR300/10	2	NTS36[2]	251[3]	245,5[4]	NTC36	314	277	NDK36	M16	83	**SNS3136-H-D**
NFR300/10	2	NTS36[2]	251[3]	245,5[4]	NTC36	314	277	NDK36	M16	83	**SNS3136-H-D**
NFR320/6	2	NTS38/160	271	265,5	NTC38/160	330	294,5	NDK38	M20	102	**SNS3236-H-D**
NFR340/10	4	NTS40/170	291	285,5	NTC40/170	346	313	NDK40	M20	133	**SNS3140-H-D**
NFR400/8	2	NTS48/170	321	315,5	NTC48/170	401	355	NDK48	M24	184	**SNS3148-H-D**
NFR290/10	4	NTS38[2]	251[3]	245,5[4]	NTC38	312	275,5	NDK38	M16	86	**SNS3038-H-D**
NFR290/10	4	NTS38[2]	251[3]	245,5[4]	NTC38	312	275,5	NDK38	M16	86	**SNS3038-H-D**
NFR320/10	2	NTS38[2]	271[3]	265,5[4]	NTC38	334	297	NDK38	M20	102	**SNS3138-H-D**
NFR320/10	2	NTS38[2]	271[3]	265,5[4]	NTC38	334	297	NDK38	M20	102	**SNS3138-H-D**
NFR340/6	2	NTS40/170	291	285,5	NTC40/170	347	313	NDK40	M20	133	**SNS3238-H-D**

Plummer block housings

SNS, split
For spherical roller bearings with tapered bore and adapter sleeve
Metric shaft

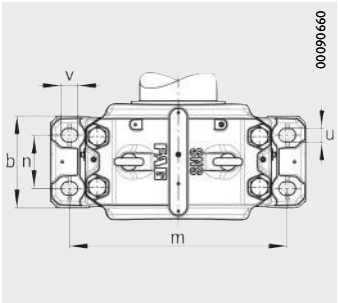

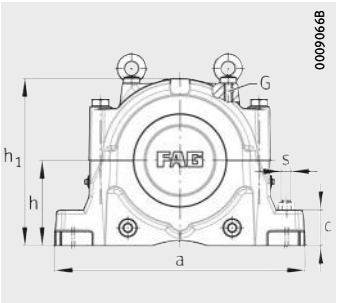

Dimension table (continued) · Dimensions in mm

Shaft	Housing Dimensions														Spherical roller bearing and accessories	
d_1	h	h_1	g	b	c	a	m	n	v	u	s	D	k	e	Bearing	Adapter sleeve
180	220	434	290	240	90	640	540	140	42	35	M30	360	140	12	**22240..-K**	H3140(-HG)
180	260	516	320	280	100	770	650	160	50	42	M36	420	166	13	**22340..-K**	H2340(-HG)
180	190	375	260	210	80	560	480	120	34	28	M24	310	122	10	**23040..-K**	H3040(-HG)
180	190	375	260	210	80	560	480	120	34	28	M24	310	122	10	**230SM180-MA**[1]	–
180	210	411	280	230	85	610	510	130	42	35	M30	340	132	10	**23140..-K**	H3140(-HG)
180	210	411	280	230	85	610	510	130	42	35	M30	340	132	10	**231SM180-MA**	–
180	220	434	290	240	90	640	540	140	42	35	M30	360	140	12	**23240..-K**	H2340(-HG)
200	240	474	310	260	95	700	600	150	42	35	M30	400	148	12	**22244..-K**	H3144X(-HG)
200	280	550	320	280	105	790	670	160	50	42	M36	460	166	16	**22344..-K**	H2344X(-HG)
200	210	411	280	230	85	610	510	130	42	35	M30	340	130	10	**23044..-K**	H3044X(-HG)
200	210	411	280	230	85	610	510	130	42	35	M30	340	130	10	**230SM200-MA**	–
200	220	434	290	240	90	640	540	140	42	35	M30	370	140	12	**23144..-K**	H3144X(-HG)
200	220	434	290	240	90	640	540	140	42	35	M30	370	140	12	**231SM200-MA**[1]	–
200	240	474	310	260	95	700	600	150	42	35	M30	400	164	12	**23244..-K**	H2344X(-HG)
220	260	516	320	280	100	770	650	160	50	42	M36	440	164	13	**22248..-K**	H3148X(-HG)
220	300	591	350	310	110	830	710	190	50	42	M36	500	180	22	**22348..-K**	H2348X(-HG)
220	220	434	290	240	90	640	540	140	42	35	M30	360	140	12	**23048..-K**	H3048(-HG)
220	220	434	290	240	90	640	540	140	42	35	M30	360	140	12	**230SM220-MA**[1]	–
220	240	474	310	260	95	700	600	150	42	35	M30	400	148	12	**23148..-K**	H3148X(-HG)
220	240	474	310	260	95	700	600	150	42	35	M30	400	148	12	**231SM220-MA**	–
220	260	516	320	280	100	770	650	160	50	42	M36	440	180	13	**23248..-K**	H2348X(-HG)
240	300	591	350	310	110	830	710	190	50	42	M36	480	181	22	**22252..-K**	H3152X(-HG)
240	320	631	370	330	115	880	750	200	50	42	M36	540	196	23	**22352..-K**	H2352X(-HG)
240	240	474	310	260	95	700	600	150	42	35	M30	400	148	12	**23052..-K**	H3052X(-HG)
240	240	474	310	260	95	700	600	150	42	35	M30	400	148	12	**230SM240-MA**	–
240	260	516	320	280	100	770	650	160	50	42	M36	440	164	13	**23152..-K**	H3152X(-HG)
240	260	516	320	280	100	770	650	160	50	42	M36	440	164	13	**231SM240-MA**[1]	–
240	300	591	350	310	110	830	710	190	50	42	M36	480	194	22	**23252..-K**	H2352X(-HG)

① Locating bearing; ② Non-locating bearing

1) Split bearing in associated housing has restricted usability. Please ask for further information.

2) Alternatively also available with split labyrinth seal NTSG.

3) With NTSG: width g_L increased by 16 mm.

4) With NTSG: width g_{LD} increased by 8 mm.

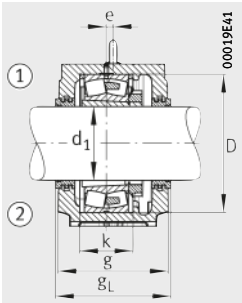

Labyrinth seal NTS

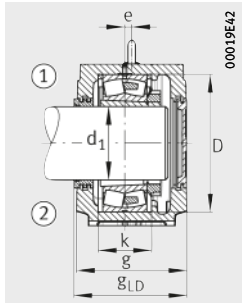

Labyrinth seal NTS
Cover NDK

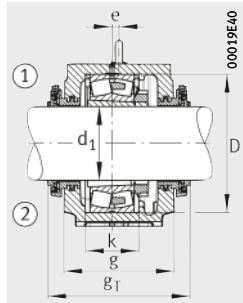

Taconite seal NTC

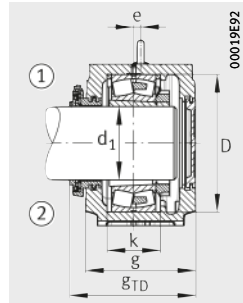

Taconite seal NTC
Cover NDK

									Housing		
Locating ring		Labyrinth seal			Taconite seal			Cover	G	Mass	Designation
	Quantity		g_L mm	g_{LD} mm		g_T mm	g_{TD} mm			m ≈ kg	
NFR360/21	2	NTS48/180	301	295,5	NTC48/180	380	335	NDK48	M20	148	**SNS3048-H-D**
NFR420/14	2	NTS56/180	331	325,5	NTC56/180	411	365	NDK56	M24	249	**SNS3056-H-D**
NFR310/10	4	NTS40[2)]	271[3)]	265,5[4)]	NTC40	326	293	NDK40	M20	105	**SNS3040-H-D**
NFR310/10	4	NTS40[2)]	271[3)]	265,5[4)]	NTC40	326	293	NDK40	M20	105	**SNS3040-H-D**
NFR340/10	2	NTS40[2)]	291[3)]	285,5[4)]	NTC40	354	317	NDK40	M20	133	**SNS3140-H-D**
NFR340/10	2	NTS40[2)]	291[3)]	285,5[4)]	NTC40	354	317	NDK40	M20	133	**SNS3140-H-D**
NFR360/6	2	NTS48/180	301	295,5	NTC48/180	381	335	NDK48	M20	148	**SNS3240-H-D**
NFR400/10	4	NTS48/200	321	315,5	NTC48/200	400	355	NDK48	M24	184	**SNS3148-H-D**
NFR460/10,5	2	NTS56/200	331	325,5	NTC56/200	411	365	NDK56	M24	264	**SNS3156-H-D**
NFR340/10	4	NTS44[2)]	291[3)]	285,5[4)]	NTC44	370	325	NDK44	M20	129	**SNS3044-H-D**
NFR340/10	4	NTS44[2)]	291[3)]	285,5[4)]	NTC44	370	325	NDK44	M20	129	**SNS3044-H-D**
NFR370/10	2	NTS44[2)]	301[3)]	295,5[4)]	NTC44	380	335	NDK44	M20	146	**SNS3144-H-D**
NFR370/10	2	NTS44[2)]	301[3)]	295,5[4)]	NTC44	380	335	NDK44	M20	146	**SNS3144-H-D**
NFR400/10	2	NTS48/200	321	315,5	NTC48/200	401	355	NDK48	M24	183	**SNS3244-H-D**
NFR440/22	2	NTS52/220	331	325,5	NTC52/220	410	365	NDK52	M24	238	**SNS3152-H-D**
NFR500/12,5	2	NTS60/220	361	355,5	NTC60/220	441	395	NDK60	M30	317	**SNS3160-H-D**
NFR360/12	4	NTS48[2)]	301[3)]	295,5[4)]	NTC48	380	335	NDK48	M20	148	**SNS3048-H-D**
NFR360/12	4	NTS48[2)]	301[3)]	295,5[4)]	NTC48	380	335	NDK48	M20	148	**SNS3048-H-D**
NFR400/10	2	NTS48[2)]	321[3)]	315,5[4)]	NTC48	400	355	NDK48	M24	184	**SNS3148-H-D**
NFR400/10	2	NTS48[2)]	321[3)]	315,5[4)]	NTC48	400	355	NDK48	M24	184	**SNS3148-H-D**
NFR440/10	2	NTS52/220	331	325,5	NTC52/220	410	365	NDK52	M24	235	**SNS3248-H-D**
NFR480/25,5	2	NTS64/240	361	355,5	NTC64/240	440	395	NDK64	M30	332	**SNS3064-H-D**
NFR540/15,5	2	NTS64/240	381	375,5	NTC64/240	460	415	NDK64	M30	368	**SNS3164-H-D**
NFR400/22	2	NTS52[2)]	321[3)]	315,5[4)]	NTC52	401	355	NDK52	M24	180	**SNS3052-H-D**
NFR400/22	2	NTS52[2)]	321[3)]	315,5[4)]	NTC52	401	355	NDK52	M24	180	**SNS3052-H-D**
NFR440/10	2	NTS52[2)]	331[3)]	325,5[4)]	NTC52	410	365	NDK52	M24	238	**SNS3152-H-D**
NFR440/10	2	NTS52[2)]	331[3)]	325,5[4)]	NTC52	410	365	NDK52	M24	238	**SNS3152-H-D**
NFR480/10	2	NTS64/240	361	355,5	NTC64/240	440	395	NDK64	M30	331	**SNS3252-H-D**

Plummer block housings

SNS, split
For spherical roller bearings with tapered bore and adapter sleeve
Metric shaft

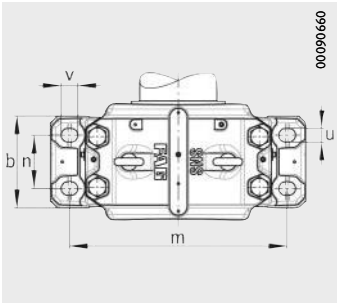

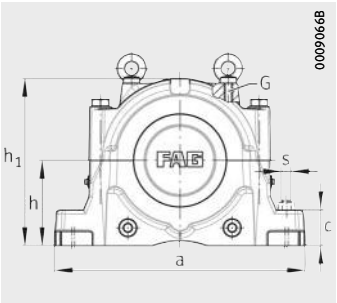

Dimension table (continued) · Dimensions in mm

Shaft	Housing Dimensions														Spherical roller bearing and accessories	
d_1	h	h_1	g	b	c	a	m	n	v	u	s	D	k	e	Bearing	Adapter sleeve
260	300	591	350	310	110	830	710	190	50	42	M36	500	180	22	**22256..-K**	H3156X(-HG)
260	340	675	400	360	120	950	810	220	50	42	M36	580	210	24	**22356..-K**	H2356X(-HG)
260	260	516	320	280	100	770	650	160	50	42	M36	420	166	13	**23056..-K**	H3056(-HG)
260	260	516	320	280	100	770	650	160	50	42	M36	420	166	13	**230SM260-MA**[1)]	–
260	280	550	320	280	105	790	670	160	50	42	M36	460	166	16	**23156..-K**	H3156X(-HG)
260	280	550	320	280	105	790	670	160	50	42	M36	460	166	16	**231SM260-MA**	–
260	300	591	350	310	110	830	710	190	50	42	M36	500	196	22	**23256..-K**	H2356X(-HG)
260	300	591	350	310	110	830	710	190	50	42	M36	500	196	22	**232SM260-MA**[1)]	–
280	320	631	370	330	115	880	750	200	50	42	M36	540	196	23	**22260..-K**	H3160(-HG)
280	280	550	320	280	105	790	670	160	50	42	M36	460	168	16	**23060..-K**	H3060(-HG)
280	280	550	320	280	105	790	670	160	50	42	M36	460	168	16	**230SM280-MA**[1)]	–
280	300	591	350	310	110	830	710	190	50	42	M36	500	180	22	**23160..-K**	H3160(-HG)
280	300	591	350	310	110	830	710	190	50	42	M36	500	180	22	**231SM280-MA**[1)]	–
280	320	631	370	330	115	880	750	200	50	42	M36	540	212	23	**23260..-K**	H3260(-HG)
300	340	675	400	360	120	950	810	220	50	42	M36	580	190	24	**22264..-K**	H3164-HG
300	300	591	350	310	110	830	710	190	50	42	M36	480	181	22	**23064..-K**	H3064-HG
300	300	591	350	310	110	830	710	190	50	42	M36	480	181	22	**230SM300-MA**[1)]	–
300	320	631	370	330	115	880	750	200	50	42	M36	540	196	23	**23164..-K**	H3164-HG
300	320	631	370	330	115	880	750	200	50	42	M36	540	196	23	**231SM300-MA**[1)]	–
300	340	675	400	360	120	950	810	220	50	42	M36	580	228	24	**23264..-K**	H3264-HG
300	340	675	400	360	120	950	810	220	50	42	M36	580	228	24	**232SM300-MA**[1)]	–
320	320	631	370	330	115	880	750	200	50	42	M36	520	197	23	**23068..-K**	H3068-HG
320	320	631	370	330	115	880	750	200	50	42	M36	520	197	23	**230SM320-MA**[1)]	–
320	340	675	400	360	120	950	810	220	50	42	M36	580	210	24	**23168..-K**	H3168-HG
320	340	675	400	360	120	950	810	220	50	42	M36	580	210	24	**231SM320-MA**	–
320	360	715	400	360	120	1 040	870	220	50	42	M36	620	244	30	**23268..-K**	H3268-HG

① Locating bearing; ② Non-locating bearing

[1)] Split bearing in associated housing has restricted usability.
Please ask for further information.

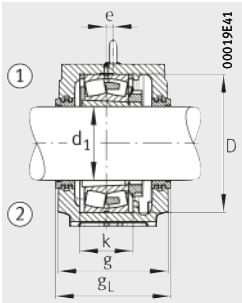

Labyrinth seal NTS

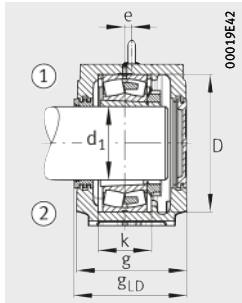

Labyrinth seal NTS
Cover NDK

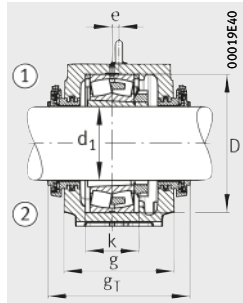

Taconite seal NTC

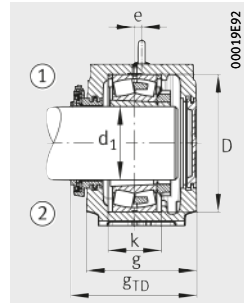

Taconite seal NTC
Cover NDK

									Housing		
Locating ring		Labyrinth seal			Taconite seal			Cover	G	Mass	Designation
	Quan-tity		g_L mm	g_{LD} mm		g_T mm	g_{TD} mm			m ≈ kg	
NFR500/25	2	NTS60/260	361	355,5	NTC60/260	440	395	NDK60	M30	317	**SNS3160-H-D**
NFR580/17,5	2	NTS68/260	411	405,5	NTC68/260	490	445	NDK68	M30	461	**SNS3168-H-D**
NFR420/10	6	NTS56	331	325,5	NTC56	411	365	NDK56	M24	249	**SNS3056-H-D**
NFR420/10	6	NTS56	331	325,5	NTC56	411	365	NDK56	M24	249	**SNS3056-H-D**
NFR460/10	2	NTS56	331	325,5	NTC56	410	365	NDK56	M24	264	**SNS3156-H-D**
NFR460/10	2	NTS56	331	325,5	NTC56	410	365	NDK56	M24	264	**SNS3156-H-D**
NFR500/10	2	NTS60/260	361	355,5	NTC60/260	441	395	NDK60	M30	314	**SNS3256-H-D**
NFR500/10	2	NTS60/260	361	355,5	NTC60/260	441	395	NDK60	M30	314	**SNS3256-H-D**
NFR540/28	2	NTS64/280	381	375,5	NTC64/280	460	415	NDK64	M30	368	**SNS3164-H-D**
NFR460/25	2	NTS60	331	325,5	NTC60	411	365	NDK60	M24	260	**SNS3060-H-D**
NFR460/25	2	NTS60	331	325,5	NTC60	411	365	NDK60	M24	260	**SNS3060-H-D**
NFR500/10	2	NTS60	361	355,5	NTC60	440	395	NDK60	M30	317	**SNS3160-H-D**
NFR500/10	2	NTS60	361	355,5	NTC60	440	395	NDK60	M30	317	**SNS3160-H-D**
NFR540/10	2	NTS64/280	381	375,5	NTC64/280	461	415	NDK64	M30	364	**SNS3260-H-D**
NFR580/20	2	NTS68/300	411	405,5	NTC68/300	490	445	NDK68	M30	466	**SNS2264-H-D**
NFR480/10	6	NTS64	361	355,5	NTC64	441	395	NDK64	M30	332	**SNS3064-H-D**
NFR480/10	6	NTS64	361	355,5	NTC64	441	395	NDK64	M30	332	**SNS3064-H-D**
NFR540/10	2	NTS64	381	375,5	NTC64	460	415	NDK64	M30	368	**SNS3164-H-D**
NFR540/10	2	NTS64	381	375,5	NTC64	460	415	NDK64	M30	368	**SNS3164-H-D**
NFR580/10	2	NTS68/300	411	405,5	NTC68/300	491	445	NDK68	M30	457	**SNS3264-H-D**
NFR580/10	2	NTS68/300	411	405,5	NTC68/300	491	445	NDK68	M30	457	**SNS3264-H-D**
NFR520/16	4	NTS68	381	375,5	NTC68	461	415	NDK68	M30	386	**SNS3068-H-D**
NFR520/16	4	NTS68	381	375,5	NTC68	461	415	NDK68	M30	386	**SNS3068-H-D**
NFR580/10	2	NTS68	411	405,5	NTC68	490	445	NDK68	M30	461	**SNS3168-H-D**
NFR580/10	2	NTS68	411	405,5	NTC68	490	445	NDK68	M30	461	**SNS3168-H-D**
NFR620/10	2	NTS76/320	411	405,5	NTC76/320	490	445	NDK76	M36	530	**SNS3268-H-D**

Plummer block housings

SNS, split
For spherical roller bearings with tapered bore and adapter sleeve
Metric shaft

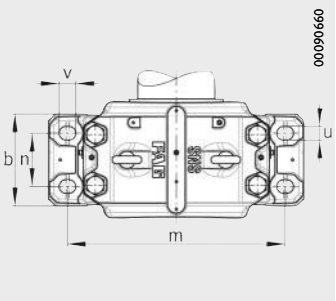

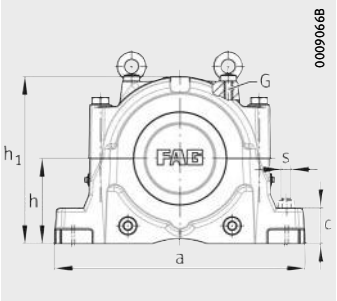

Dimension table (continued) · Dimensions in mm

Shaft	Housing Dimensions														Spherical roller bearing and accessories	
d_1	h	h_1	g	b	c	a	m	n	v	u	s	D	k	e	Bearing	Adapter sleeve
340	380	755	430	390	125	1 120	950	240	60	48	M42	650	220	30	**22272..-K**	H3172-HG
340	320	631	370	330	115	880	750	200	50	42	M36	540	198	23	**23072..-K**	H3072-HG
340	320	631	370	330	115	880	750	200	50	42	M36	540	198	23	**230SM340-MA**[1)]	–
340	350	695	400	360	120	1 000	840	220	50	42	M36	600	212	30	**23172..-K**	H3172-HG
340	350	695	400	360	120	1 000	840	220	50	42	M36	600	212	30	**231SM340-MA**[1)]	–
340	380	755	430	390	125	1 120	950	240	60	48	M42	650	252	30	**23272..-K**	H3272-HG
340	380	755	430	390	125	1 120	950	240	60	48	M42	650	252	30	**232SM340-MA**[1)]	–
360	340	675	400	360	120	950	810	220	50	42	M36	560	180	24	**23076..-K**	H3076-HG
360	340	675	400	360	120	950	810	220	50	42	M36	560	180	24	**230SM360-MA**	–
360	360	715	400	360	120	1 040	870	220	50	42	M36	620	214	30	**23176..-K**	H3176-HG
360	360	715	400	360	120	1 040	870	220	50	42	M36	620	214	30	**231SM360-MA**[1)]	–
360	410	810	460	420	130	1 170	1 000	260	60	48	M42	680	260	35	**23276..-K**	H3276-HG
380	350	695	400	360	120	1 000	840	220	50	42	M36	600	192	30	**23080..-K**	H3080-HG
380	350	695	400	360	120	1 000	840	220	50	42	M36	600	192	30	**230SM380-MA**[1)]	–
380	380	755	430	390	125	1 120	950	240	60	48	M42	650	220	30	**23180..-K**	H3180-HG
380	380	755	430	390	125	1 120	950	240	60	48	M42	650	220	30	**231SM380-MA**[1)]	–
380	420	835	460	430	135	1 220	1 030	260	60	48	M42	720	276	35	**23280..-K**	H3280-HG
400	360	715	400	360	120	1 040	870	220	50	42	M36	620	194	30	**23084..-K**	H3084X-HG
400	360	715	400	360	120	1 040	870	220	50	42	M36	620	194	30	**230SM400-MA**[1)]	–
400	410	810	460	420	130	1 170	1 000	260	60	48	M42	700	244	35	**23184..-K**	H3184-HG
400	410	810	460	420	130	1 170	1 000	260	60	48	M42	700	244	35	**231SM400-MA**	–
400	440	880	470	440	145	1 280	1 070	260	60	48	M42	760	292	35	**23284..-K**	H3284-HG

① Locating bearing; ② Non-locating bearing

1) Split bearing in associated housing has restricted usability.
Please ask for further information.

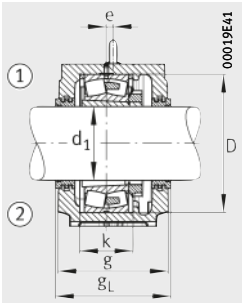

Labyrinth seal NTS

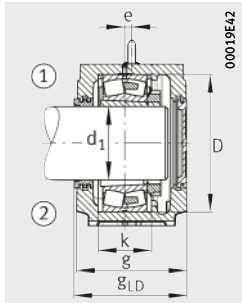

Labyrinth seal NTS
Cover NDK

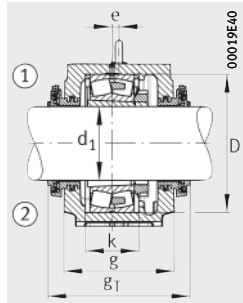

Taconite seal NTC

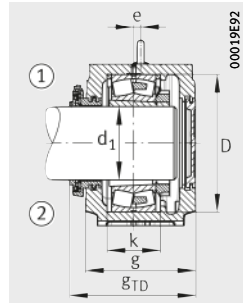

Taconite seal NTC
Cover NDK

									Housing		
Locating ring		Labyrinth seal			Taconite seal			Cover	G	Mass	Designation
	Quantity		g_L mm	g_{LD} mm		g_T mm	g_{TD} mm			m ≈ kg	
NFR650/25	2	NTS80/340	441	435,5	NTC80/340	520	475	NDK80	M42	681	**SNS3180-H-D**
NFR540/16	4	NTS72	381	375,5	NTC72	461	415	NDK72	M30	356	**SNS3072-H-D**
NFR540/16	4	NTS72	381	375,5	NTC72	461	415	NDK72	M30	356	**SNS3072-H-D**
NFR600/10	2	NTS72	411	405,5	NTC72	490	445	NDK72	M36	498	**SNS3172-H-D**
NFR600/10	2	NTS72	411	405,5	NTC72	490	445	NDK72	M36	498	**SNS3172-H-D**
NFR650/10	2	NTS80/340	441	435,5	NTC80/340	520	475	NDK80	M42	675	**SNS3272-H-D**
NFR650/10	2	NTS80/340	441	435,5	NTC80/340	520	475	NDK80	M42	675	**SNS3272-H-D**
NFR560/22,5	2	NTS76	411	405,5	NTC76	491	445	NDK76	M30	481	**SNS3076-H-D**
NFR560/22,5	2	NTS76	411	405,5	NTC76	491	445	NDK76	M30	481	**SNS3076-H-D**
NFR620/10	2	NTS76	411	405,5	NTC76	490	445	NDK76	M36	534	**SNS3176-H-D**
NFR620/10	2	NTS76	411	405,5	NTC76	490	445	NDK76	M36	534	**SNS3176-H-D**
NFR680/10	2	NTS92/360	471	465,5	NTC92/360	550	505	NDK92	M42	841	**SNS3276-H-D**
NFR600/22	2	NTS80	411	405,5	NTC80	491	445	NDK80	M36	489	**SNS3080-H-D**
NFR600/22	2	NTS80	411	405,5	NTC80	491	445	NDK80	M36	489	**SNS3080-H-D**
NFR650/10	2	NTS80	441	435,5	NTC80	520	475	NDK80	M42	681	**SNS3180-H-D**
NFR650/10	2	NTS80	441	435,5	NTC80	520	475	NDK80	M42	681	**SNS3180-H-D**
NFR720/10	2	NTS88/380	471	465,5	NTC88/380	550	505	NDK88	M42	895	**SNS3280-H-D**
NFR620/22	2	NTS84	411	405,5	NTC84	491	445	NDK84	M36	527	**SNS3084-H-D**
NFR620/22	2	NTS84	411	405,5	NTC84	491	445	NDK84	M36	527	**SNS3084-H-D**
NFR700/10	2	NTS84	471	465,5	NTC84	550	505	NDK84	M42	821	**SNS3184-H-D**
NFR700/10	2	NTS84	471	465,5	NTC84	550	505	NDK84	M42	821	**SNS3184-H-D**
NFR760/10	2	NTS92/400	481	475,5	NTC92/400	560	515	NDK92	M48	984	**SNS3284-H-D**

Plummer block housings

SNS, split
For spherical roller bearings with tapered bore and adapter sleeve
Metric shaft

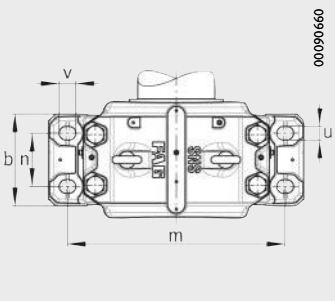

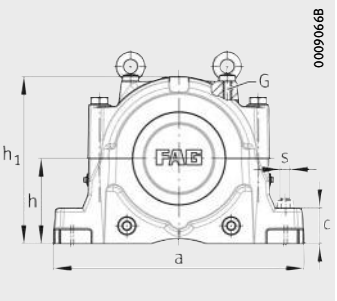

Dimension table (continued) · Dimensions in mm

Shaft	Housing Dimensions														Spherical roller bearing and accessories	
d_1	h	h_1	g	b	c	a	m	n	v	u	s	D	k	e	Bearing	Adapter sleeve
410	380	755	430	390	125	1 120	950	240	60	48	M42	650	200	30	**23088..-K**	H3088-HG
410	380	755	430	390	125	1 120	950	240	60	48	M42	650	200	30	**230SM410-MA**	–
410	420	835	460	430	135	1 220	1 030	260	60	48	M42	720	246	35	**23188..-K**	H3188-HG
410	420	835	460	430	135	1 220	1 030	260	60	48	M42	720	246	35	**231SM410-MA**[1]	–
410	460	920	470	440	155	1 330	1 110	260	70	56	M48	790	300	35	**23288..-K**	H3288-HG
430	410	810	460	420	130	1 170	1 000	260	60	48	M42	680	224	35	**23092..-K**	H3092-HG
430	440	880	470	440	145	1 280	1 070	260	60	48	M42	760	260	35	**23192..-K**	H3192-HG
450	410	810	460	420	130	1 170	1 000	260	60	48	M42	700	224	35	**23096..-K**	H3096-HG
450	460	920	470	440	155	1 330	1 110	260	70	56	M48	790	268	35	**23196..-K**	H3196-HG
470	420	835	460	430	135	1 220	1 030	260	60	48	M42	720	226	35	**230/500..-K**	H30/500-HG
500	460	920	470	440	155	1 330	1 110	260	70	56	M48	780	248	35	**230/530..-K**	H30/530-HG

① Locating bearing; ② Non-locating bearing

[1] Split bearing in associated housing has restricted usability.
Please ask for further information.

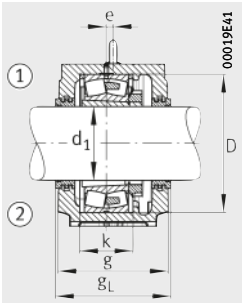

Labyrinth seal NTS

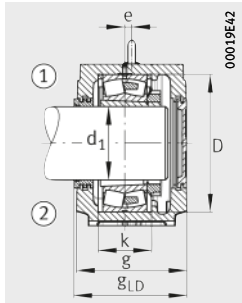

Labyrinth seal NTS
Cover NDK

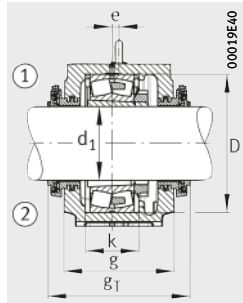

Taconite seal NTC

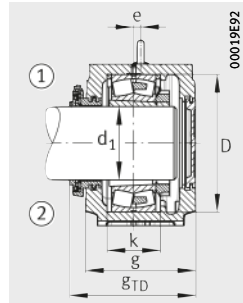

Taconite seal NTC
Cover NDK

									Housing		
Locating ring		Labyrinth seal			Taconite seal			Cover	G	Mass	Designation
	Quantity		g_L mm	g_{LD} mm		g_T mm	g_{TD} mm			m ≈ kg	
NFR650/21,5	2	NTS88	441	435,5	NTC88	521	475	NDK88	M42	672	**SNS3088-H-D**
NFR650/21,5	2	NTS88	441	435,5	NTC88	521	475	NDK88	M42	672	**SNS3088-H-D**
NFR720/10	2	NTS88	471	465,5	NTC88	550	505	NDK88	M42	895	**SNS3188-H-D**
NFR720/10	2	NTS88	471	465,5	NTC88	550	505	NDK88	M42	895	**SNS3188-H-D**
NFR790/10	2	NTS96/410	481	475,5	NTC96/410	560	515	NDK96	M48	1 100	**SNS3288-H-D**
NFR680/30,5	2	NTS92	471	465,5	NTC92	551	505	NDK92	M42	849	**SNS3092-H-D**
NFR760/10	2	NTS92	481	475,5	NTC92	560	515	NDK92	M48	993	**SNS3192-H-D**
NFR700/29,5	2	NTS96	471	465,5	NTC96	551	505	NDK96	M42	806	**SNS3096-H-D**
NFR790/10	2	NTS96	481	475,5	NTC96	560	515	NDK96	M48	1 100	**SNS3196-H-D**
NFR720/29,5	2	NTS500	471	465,5	NTC500	551	505	NDK500	M42	895	**SNS30/500-H-D**
NFR780/31,5	2	NTS530	481	475,5	NTC530	561	515	NDK530	M48	1 100	**SNS30/530-H-D**

Plummer block housings

SNS, split
For spherical roller bearings with cylindrical bore
Metric shaft

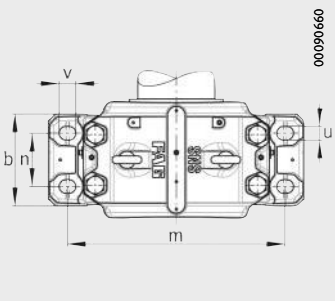

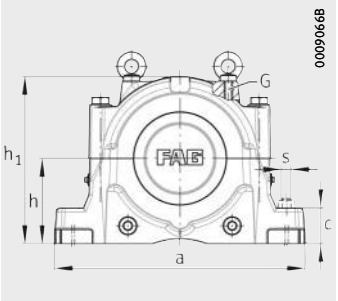

Dimension table · Dimensions in mm

Shaft		Housing Dimensions														Spherical roller bearing and accessories
d	d_2	h	h_1	g	b	c	a	m	n	v	u	s	D	k	e	Bearing
130	150	170	333	230	180	70	510	430	100	34	28	M24	280	108	14	**22 326**
140	160	180	353	240	190	75	530	450	110	34	28	M24	300	116	15	**22 328**
150	170	190	375	260	210	80	560	480	120	34	28	M24	320	124	10	**22 330**
160	180	180	353	240	190	75	530	450	110	34	28	M24	290	115	15	**22 232**
160	180	210	411	280	230	85	610	510	130	42	35	M30	340	132	10	**22 332**
160	180	180	353	240	190	75	530	450	110	34	28	M24	290	115	15	**23 232**
170	190	190	375	260	210	80	560	480	120	34	28	M24	310	122	10	**22 234**
170	190	220	434	290	240	90	640	540	140	42	35	M30	360	140	12	**22 334**
170	180	170	333	230	180	70	510	430	100	34	28	M24	280	108	14	**23 134**
170	190	190	375	260	210	80	560	480	120	34	28	M24	310	122	10	**23 234**
180	200	190	375	260	210	80	560	480	120	34	28	M24	320	124	10	**22 236**
180	200	170	333	230	180	70	510	430	100	34	28	M24	280	108	14	**23 036**
180	200	180	353	240	190	75	530	450	110	34	28	M24	300	116	15	**23 136**
180	200	190	375	260	210	80	560	480	120	34	28	M24	320	124	10	**23 236**
180	200	170	333	230	180	70	510	430	100	34	28	M24	280	108	14	**24 036**
190	210	210	411	280	230	85	610	510	130	42	35	M30	340	132	10	**22 238**
190	210	240	474	310	260	95	700	600	150	42	35	M30	400	148	12	**22 338**
190	200	180	353	240	190	75	530	450	110	34	28	M24	290	115	15	**23 038**
190	200	190	375	260	210	80	560	480	120	34	28	M24	320	124	10	**23 138**
190	210	210	411	280	230	85	610	510	130	42	35	M30	340	132	10	**23 238**
190	200	180	353	240	190	75	530	450	110	34	28	M24	290	115	15	**24 038**
200	220	220	434	290	240	90	640	540	140	42	35	M30	360	140	12	**22 240**
200	220	190	375	260	210	80	560	480	120	34	28	M24	310	122	10	**23 040**
200	220	210	411	280	230	85	610	510	130	42	35	M30	340	132	10	**23 140**
200	220	220	434	290	240	90	640	540	140	42	35	M30	360	140	12	**23 240**
200	220	190	375	260	210	80	560	480	120	34	28	M24	310	122	10	**24 040**

① Locating bearing; ② Non-locating bearing

1) Alternatively also available with split labyrinth seal NTSG.

2) With NTSG: width g_L increased by 16 mm.

3) With NTSG: width g_{LD} increased by 8 mm.

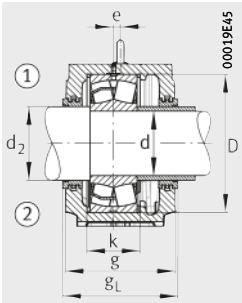

Labyrinth seal NTS

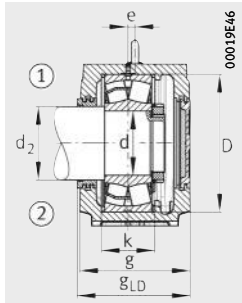

Labyrinth seal NTS
Cover NDK

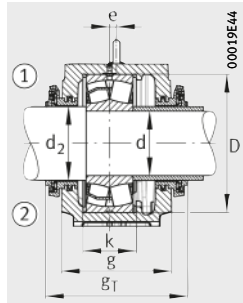

Taconite seal NTC

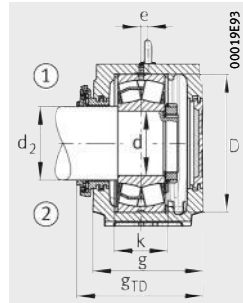

Taconite seal NTC
Cover NDK

									Housing		
Locating ring		Labyrinth seal			Taconite seal			Cover	G	Mass	Designation
	Quantity		g_L mm	g_{LD} mm		g_T mm	g_{TD} mm			m ≈ kg	
NFR280/7,5	2	NTS34[1)]	241[2)]	235,5[3)]	NTC34	299	264,5	NDK34	M16	75	**SNS3134-H-D**
NFR300/7	2	NTS36[1)]	251[2)]	245,5[3)]	NTC36	314	277	NDK36	M16	83	**SNS3136-H-D**
NFR320/8	2	NTS38[1)]	271[2)]	265,5[3)]	NTC38	334	297	NDK38	M20	102	**SNS3138-H-D**
NFR290/17,5	2	NTS38/180	251	245,5	NTC38/180	314	277	NDK38	M16	86	**SNS3038-H-D**
NFR340/9	2	NTS40[1)]	291[2)]	285,5[3)]	NTC40	354	317	NDK40	M20	133	**SNS3140-H-D**
NFR290/5,5	2	NTS38/180	251	245,5	NTC38/180	314	277	NDK38	M16	86	**SNS3038-H-D**
NFR310/18	2	NTS40/190	271	265,5	NTC40/190	334	297	NDK40	M20	105	**SNS3040-H-D**
NFR360/10	2	NTS48/190	301	295,5	NTC48/190	380	335	NDK48	M20	148	**SNS3048-H-D**
NFR280/10	2	NTS40[1)]	241[2)]	235,5[3)]	NTC40	298	264	NDK40	M16	71	**SNS3134-Z-D**
NFR310/6	2	NTS40/190	271	265,5	NTC40/190	326	293	NDK40	M20	105	**SNS3234-Z-D**
NFR320/19	2	NTS44[1)]	271[2)]	265,5[3)]	NTC44	350	305	NDK44	M20	97	**SNS3138-Z-D**
NFR280/17	2	NTS44[1)]	241[2)]	235,5[3)]	NTC44	320	275	NDK44	M16	67	**SNS3036-Z-D**
NFR300/10	2	NTS44[1)]	251[2)]	245,5[3)]	NTC44	330	285	NDK44	M16	77	**SNS3136-Z-D**
NFR320/6	2	NTS44[1)]	271[2)]	265,5[3)]	NTC44	350	305	NDK44	M20	97	**SNS3236-Z-D**
NFR280/4	2	NTS44[1)]	241[2)]	235,5[3)]	NTC44	320	275	NDK44	M16	67	**SNS3036-Z-D**
NFR340/10	4	NTS48/210	291	285,5	NTC48/210	372	302,5	NDK48	M20	125	**SNS3140-Z-D**
NFR400/8	2	NTS48/210	321	315,5	NTC48/210	402	329,5	NDK48	M24	184	**SNS3148-H-D**
NFR290/10	4	NTS44[1)]	251[2)]	245,5[3)]	NTC44	330	285	NDK44	M16	81	**SNS3038-Z-D**
NFR320/10	2	NTS44[1)]	271[2)]	265,5[3)]	NTC44	350	305	NDK44	M20	97	**SNS3138-Z-D**
NFR340/6	2	NTS48/210	291	285,5	NTC48/210	372	302,5	NDK48	M20	125	**SNS3238-Z-D**
NFR290/7,5	2	NTS44[1)]	251[2)]	245,5[3)]	NTC44	330	285	NDK44	M16	81	**SNS3038-Z-D**
NFR360/21	2	NTS48[1)]	301[2)]	295,5[3)]	NTC48	380	335	NDK48	M20	148	**SNS3048-H-D**
NFR310/10	4	NTS48[1)]	271[2)]	265,5[3)]	NTC48	350	305	NDK48	M20	97	**SNS3040-Z-D**
NFR340/10	2	NTS48[1)]	291[2)]	285,5[3)]	NTC48	372	302,5	NDK48	M20	125	**SNS3140-Z-D**
NFR360/6	2	NTS48[1)]	301[2)]	295,5[3)]	NTC48	380	335	NDK48	M20	148	**SNS3240-Z-D**
NFR310/6,5	2	NTS48[1)]	271[2)]	265,5[3)]	NTC48	350	305	NDK48	M20	97	**SNS3040-Z-D**

Plummer block housings

SNS, split
For spherical roller bearings with cylindrical bore
Metric shaft

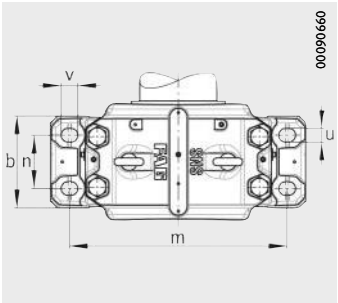

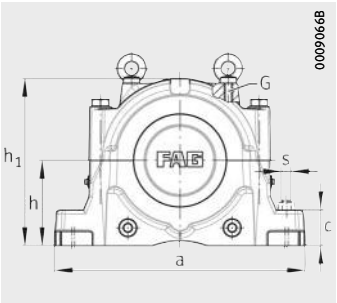

Dimension table (continued) · Dimensions in mm

Shaft		Housing Dimensions														Spherical roller bearing and accessories
d	d_2	h	h_1	g	b	c	a	m	n	v	u	s	D	k	e	Bearing
220	240	240	474	310	260	95	700	600	150	42	35	M30	400	148	12	**22 244**
220	240	280	550	320	280	105	790	670	160	50	42	M36	460	166	16	**22 344**
220	240	210	411	280	230	85	610	510	130	42	35	M30	340	130	10	**23 044**
220	240	220	434	290	240	90	640	540	140	42	35	M30	370	140	12	**23 144**
220	240	240	474	310	260	95	700	600	150	42	35	M30	400	164	12	**23 244**
220	240	210	411	280	230	85	610	510	130	42	35	M30	340	130	10	**24 044**
240	260	260	516	320	280	100	770	650	160	50	42	M36	440	164	13	**22 248**
240	260	300	591	350	310	110	830	710	190	50	42	M36	500	180	22	**22 348**
240	260	220	434	290	240	90	640	540	140	42	35	M30	360	140	12	**23 048**
240	260	240	474	310	260	95	700	600	150	42	35	M30	400	148	12	**23 148**
240	260	260	516	320	280	100	770	650	160	50	42	M36	440	180	13	**23 248**
240	260	220	434	290	240	90	640	540	140	42	35	M30	360	140	12	**24 048**
260	280	300	591	350	310	110	830	710	190	50	42	M36	480	181	22	**22 252**
260	290	320	631	370	330	115	880	750	200	50	42	M36	540	196	23	**22 352**
260	280	240	474	310	260	95	700	600	150	42	35	M30	400	148	12	**23 052**
260	280	260	516	320	280	100	770	650	160	50	42	M36	440	164	13	**23 152**
260	280	300	591	350	310	110	830	710	190	50	42	M36	480	194	22	**23 252**
260	280	240	474	310	260	95	700	600	150	42	35	M30	400	148	12	**24 052**
280	300	300	591	350	310	110	830	710	190	50	42	M36	500	180	22	**22 256**
280	310	340	675	400	360	120	950	810	220	50	42	M36	580	210	24	**22 356**
280	300	260	516	320	280	100	770	650	160	50	42	M36	420	166	13	**23 056**
280	300	280	550	320	280	105	790	670	160	50	42	M36	460	166	16	**23 156**
280	300	300	591	350	310	110	830	710	190	50	42	M36	500	196	22	**23 256**
280	300	260	516	320	280	100	770	650	160	50	42	M36	420	166	13	**24 056**

① Locating bearing; ② Non-locating bearing

1) Alternatively also available with split labyrinth seal NTSG.

2) With NTSG: width g_L increased by 16 mm.

3) With NTSG: width g_{LD} increased by 8 mm.

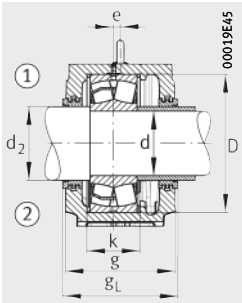

Labyrinth seal NTS

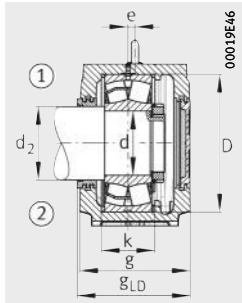

Labyrinth seal NTS
Cover NDK

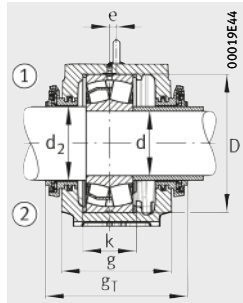

Taconite seal NTC

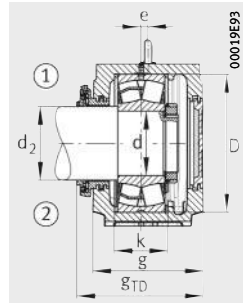

Taconite seal NTC
Cover NDK

									Housing		
Locating ring		Labyrinth seal			Taconite seal			Cover	G	Mass	Designation
	Quantity		g_L mm	g_{LD} mm		g_T mm	g_{TD} mm			m ≈ kg	
NFR400/10	4	NTS56/240	321	315,5	NTC56/240	400	355	NDK56	M24	176	**SNS3148-Z-D**
NFR460/10,5	2	NTS56/240	331	325,5	NTC56/240	410	365	NDK56	M24	264	**SNS3156-H-D**
NFR340/10	4	NTS52[1)]	291[2)]	285,5[3)]	NTC52	370	325	NDK52	M20	121	**SNS3044-Z-D**
NFR370/10	2	NTS52[1)]	301[2)]	295,5[3)]	NTC52	380	335	NDK52	M20	138	**SNS3144-Z-D**
NFR400/10	2	NTS56/240	321	315,5	NTC56/240	400	355	NDK56	M24	174	**SNS3244-Z-D**
NFR340/6	2	NTS52[1)]	291[2)]	285,5[3)]	NTC52	370	325	NDK52	M20	121	**SNS3044-Z-D**
NFR440/22	2	NTS60/260	331	325,5	NTC60/260	410	365	NDK60	M24	229	**SNS3152-Z-D**
NFR500/12,5	2	NTS60/260	361	355,5	NTC60/260	440	395	NDK60	M30	317	**SNS3160-H-D**
NFR360/12	4	NTS56	301	295,5	NTC56	380	335	NDK56	M20	140	**SNS3048-Z-D**
NFR400/10	2	NTS56	321	315,5	NTC56	400	355	NDK56	M24	176	**SNS3148-Z-D**
NFR440/10	2	NTS60/260	331	325,5	NTC60/260	410	365	NDK60	M24	226	**SNS3248-Z-D**
NFR360/11	2	NTS56	301	295,5	NTC56	380	335	NDK56	M20	140	**SNS3048-Z-D**
NFR480/25,5	2	NTS64/280	361	355,5	NTC64/280	440	395	NDK64	M30	332	**SNS3064-H-D**
NFR540/15,5	2	NTS64/290	381	375,5	NTC64/290	460	415	NDK64	M30	368	**SNS3164-H-D**
NFR400/22	2	NTS60	321	315,5	NTC60	400	355	NDK60	M24	171	**SNS3052-Z-D**
NFR440/10	2	NTS60	331	325,5	NTC60	410	365	NDK60	M24	229	**SNS3152-Z-D**
NFR480/10	2	NTS64/280	361	355,5	NTC64/280	440	395	NDK64	M30	331	**SNS3252-Z-D**
NFR400/4	2	NTS60	321	315,5	NTC60	400	355	NDK60	M24	171	**SNS3052-Z-D**
NFR500/25	2	NTS68/300	361	355,5	NTC68/300	440	395	NDK68	M30	307	**SNS3160-Z-D**
NFR580/17,5	2	NTS68/310	411	405,5	NTC68/310	490	445	NDK68	M30	461	**SNS3168-H-D**
NFR420/10	6	NTS64	331	325,5	NTC64	410	365	NDK64	M24	240	**SNS3056-Z-D**
NFR460/10	2	NTS64	331	325,5	NTC64	410	365	NDK64	M24	255	**SNS3156-Z-D**
NFR500/10	2	NTS68/300	361	355,5	NTC68/300	440	395	NDK68	300	591	**SNS3256-Z-D**
NFR420/13	2	NTS64	331	325,5	NTC64	410	365	NDK64	M24	240	**SNS3056-Z-D**

Plummer block housings

SNS, split
For spherical roller bearings with cylindrical bore
Metric shaft

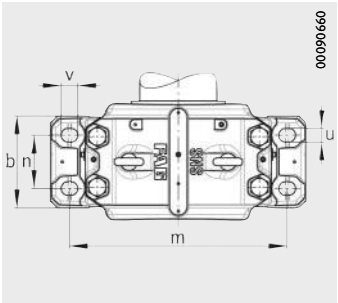

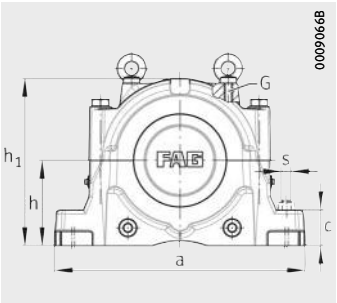

Dimension table (continued) · Dimensions in mm

Shaft		Housing Dimensions														Spherical roller bearing and accessories
d	d_2	h	h_1	g	b	c	a	m	n	v	u	s	D	k	e	Bearing
300	320	320	631	370	330	115	880	750	200	50	42	M36	540	196	23	**22 260**
300	320	280	550	320	280	105	790	670	160	50	42	M36	460	168	16	**23 060**
300	320	300	591	350	310	110	830	710	190	50	42	M36	500	180	22	**23 160**
300	320	320	631	370	330	115	880	750	200	50	42	M36	540	212	23	**23 260**
300	320	280	550	320	280	105	790	670	160	50	42	M36	460	168	16	**24 060**
320	340	340	675	400	360	120	950	810	220	50	42	M36	580	190	24	**22 264**
320	340	300	591	350	310	110	830	710	190	50	42	M36	480	181	22	**23 064**
320	340	320	631	370	330	115	880	750	200	50	42	M36	540	196	23	**23 164**
320	340	340	675	400	360	120	950	810	220	50	42	M36	580	228	24	**23 264**
320	340	300	591	350	310	110	830	710	190	50	42	M36	480	181	22	**24 064**
340	360	320	631	370	330	115	880	750	200	50	42	M36	520	197	23	**23 068**
340	360	340	675	400	360	120	950	810	220	50	42	M36	580	210	24	**23 168**
340	370	360	715	400	360	120	1 040	870	220	50	42	M36	620	244	30	**23 268**
340	360	320	631	370	330	115	880	750	200	50	42	M36	520	197	23	**24 068**
360	390	380	755	430	390	125	1 120	950	240	60	48	M42	650	220	30	**22 272**
360	380	320	631	370	330	115	880	750	200	50	42	M36	540	198	23	**23 072**
360	380	350	695	400	360	120	1 000	840	220	50	42	M36	600	212	30	**23 172**
360	390	380	755	430	390	125	1 120	950	240	60	48	M42	650	252	30	**23 272**
360	380	320	631	370	330	115	880	750	200	50	42	M36	540	198	23	**24 072**
380	400	340	675	400	360	120	950	810	220	50	42	M36	560	180	24	**23 076**
380	400	360	715	400	360	120	1 040	870	220	50	42	M36	620	214	30	**23 176**
380	410	410	810	460	420	130	1 170	1 000	260	60	48	M42	680	260	35	**23 276**
380	400	340	675	400	360	120	950	810	220	50	42	M36	560	200	24	**24 076**

① Locating bearing; ② Non-locating bearing

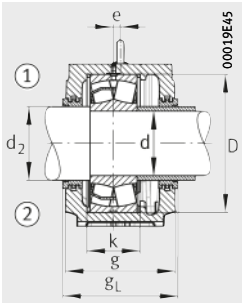

Labyrinth seal NTS

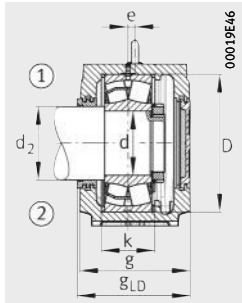

Labyrinth seal NTS
Cover NDK

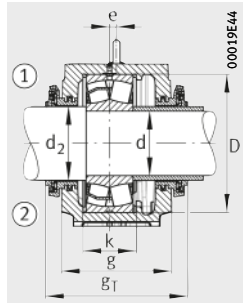

Taconite seal NTC

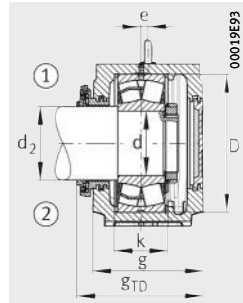

Taconite seal NTC
Cover NDK

									Housing		
Locating ring		Labyrinth seal			Taconite seal			Cover	G	Mass	Designation
	Quantity		g_L mm	g_{LD} mm		g_T mm	g_{TD} mm			m ≈ kg	
NFR540/28	2	NTS72/320	381	375,5	NTC72/320	460	415	NDK72	M30	357	**SNS3164-Z-D**
NFR460/25	2	NTS68	331	325,5	NTC68	410	365	NDK68	M24	249	**SNS3060-Z-D**
NFR500/10	2	NTS68	361	355,5	NTC68	440	395	NDK68	M30	307	**SNS3160-Z-D**
NFR540/10	2	NTS72/320	381	375,5	NTC72/320	460	415	NDK72	M30	353	**SNS3260-Z-D**
NFR460/4	2	NTS68	331	325,5	NTC68	410	365	NDK68	M24	249	**SNS3060-Z-D**
NFR580/20	2	NTS76/340	411	405,5	NTC76/340	490	445	NDK76	M30	455	**SNS2264-Z-D**
NFR480/10	6	NTS72	361	355,5	NTC72	440	395	NDK72	M30	321	**SNS3064-Z-D**
NFR540/10	2	NTS72	381	375,5	NTC72	460	415	NDK72	M30	357	**SNS3164-Z-D**
NFR580/10	2	NTS76/340	411	405,5	NTC76/340	490	445	NDK76	M30	445	**SNS3264-Z-D**
NFR480/10,5	2	NTS72	361	355,5	NTC72	440	395	NDK72	M30	321	**SNS3064-Z-D**
NFR520/16	4	NTS76	381	375,5	NTC76	460	415	NDK76	M30	374	**SNS3068-Z-D**
NFR580/10	2	NTS76	411	405,5	NTC76	490	445	NDK76	M30	450	**SNS3168-Z-D**
NFR620/10	2	NTS76/370	411	405,5	NTC76/370	490	445	NDK76	M36	530	**SNS3268-Z-D**
NFR520/8,5	2	NTS76	381	375,5	NTC76	460	415	NDK76	M30	374	**SNS3068-Z-D**
NFR650/25	2	NTS80/390	441	435,5	NTC80/390	520	475	NDK80	M42	681	**SNS3180-H-D**
NFR540/16	4	NTS80	381	375,5	NTC80	460	415	NDK80	M30	344	**SNS3072-Z-D**
NFR600/10	2	NTS80	411	405,5	NTC80	490	445	NDK80	M36	486	**SNS3172-Z-D**
NFR650/10	2	NTS80/390	441	435,5	NTC80/390	520	475	NDK80	M42	675	**SNS3272-Z-D**
NFR540/9	2	NTS80	381	375,5	NTC80	460	415	NDK80	M30	344	**SNS3072-Z-D**
NFR560/22,5	2	NTS84	411	405,5	NTC84	490	445	NDK84	M30	467	**SNS3076-Z-D**
NFR620/10	2	NTS84	411	405,5	NTC84	490	445	NDK84	M36	521	**SNS3176-Z-D**
NFR680/10	2	NTS92/410	471	465,5	NTC92/410	550	505	NDK92	M42	841	**SNS3276-Z-D**
NFR560/10	2	NTS84	411	405,5	NTC84	475	438	NDK84	M30	465	**SNS4076-Z-D**

Plummer block housings

SNS, split
For spherical roller bearings with cylindrical bore
Metric shaft

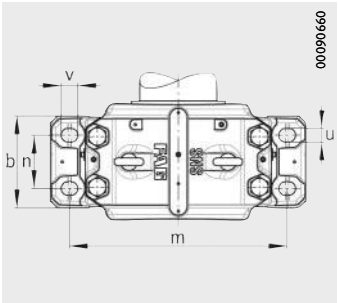

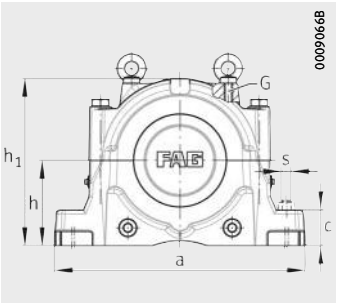

Dimension table (continued) · Dimensions in mm

Shaft		Housing Dimensions														Spherical roller bearing and accessories
d	d_2	h	h_1	g	b	c	a	m	n	v	u	s	D	k	e	Bearing
400	430	350	695	400	360	120	1 000	840	220	50	42	M36	600	192	30	**23 080**
400	430	380	755	430	390	125	1 120	950	240	60	48	M42	650	220	30	**23 180**
400	430	420	835	460	430	135	1 220	1 030	260	60	48	M42	720	276	35	**23 280**
400	430	350	695	400	360	120	1 000	840	220	50	42	M36	600	220	30	**24 080**
420	450	360	715	400	360	120	1 040	870	220	50	42	M36	620	194	30	**23 084**
420	450	410	810	460	420	130	1 170	1 000	260	60	48	M42	700	244	35	**23 184**
420	460	440	880	470	440	145	1 280	1 070	260	60	48	M42	760	292	35	**23 284**
420	450	360	715	400	360	120	1 040	870	220	50	42	M36	620	220	30	**24 084**
440	470	380	755	430	390	125	1 120	950	240	60	48	M42	650	200	30	**23 088**
440	470	420	835	460	430	135	1 220	1 030	260	60	48	M42	720	246	35	**23 188**
440	480	460	920	470	440	155	1 330	1 110	260	70	56	M48	790	300	35	**23 288**
440	470	380	755	430	390	125	1 120	950	240	60	48	M42	650	232	30	**24 088**
460	500	410	810	460	420	130	1 170	1 000	260	60	48	M42	680	224	35	**23 092**
460	500	440	880	470	440	145	1 280	1 070	260	60	48	M42	760	260	35	**23 192**
460	500	410	810	460	420	130	1 170	1 000	260	60	48	M42	680	238	35	**24 092**
480	510	410	810	460	420	130	1 170	1 000	260	60	48	M42	700	224	35	**23 096**
480	520	460	920	470	440	155	1 330	1 110	260	70	56	M48	790	268	35	**23 196**
480	510	410	810	460	420	130	1 170	1 000	260	60	48	M42	700	238	35	**24 096**
500	530	420	835	460	430	135	1 220	1 030	260	60	48	M42	720	226	35	**230/500**
500	530	420	835	460	430	135	1 220	1 030	260	60	48	M42	720	238	35	**240/500**
530	560	460	920	470	440	155	1 330	1 110	260	70	56	M48	780	248	35	**230/530**
530	560	460	920	470	440	155	1 330	1 110	260	70	56	M48	780	270	35	**240/530**

① Locating bearing; ② Non-locating bearing

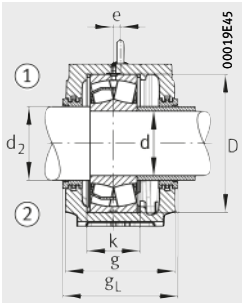

Labyrinth seal NTS

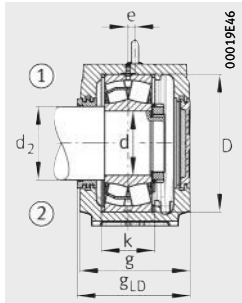

Labyrinth seal NTS
Cover NDK

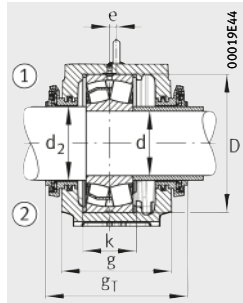

Taconite seal NTC

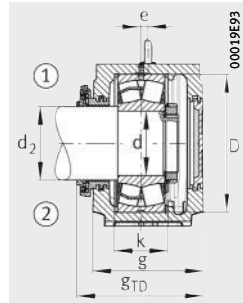

Taconite seal NTC
Cover NDK

									Housing		
Locating ring		Labyrinth seal			Taconite seal			Cover	G	Mass	Designation
	Quantity		g_L mm	g_{LD} mm		g_T mm	g_{TD} mm			m ≈ kg	
NFR600/22	2	NTS92	411	405,5	NTC92	490	445	NDK92	M36	468	**SNS3080-Z-D**
NFR650/10	2	NTS92	441	435,5	NTC92	520	475	NDK92	M42	660	**SNS3180-Z-D**
NFR720/10	2	NTS500/430	471	465,5	NTC500/430	550	505	NDK500	M42	895	**SNS3280-Z-D**
NFR600/10	2	NTS92	411	405,5	NTC92	475	438	NDK92	M36	463	**SNS4080-Z-D**
NFR620/22	2	NTS96	411	405,5	NTC96	490	445	NDK96	M36	505	**SNS3084-Z-D**
NFR700/10	2	NTS96	471	465,5	NTC96	550	505	NDK96	M42	799	**SNS3184-Z-D**
NFR760/10	2	NTS530/460	481	475,5	NTC530/460	560	515	NDK530	M48	956	**SNS3284-Z-D**
NFR620/10	2	NTS96	411	405,5	NTC96	475	438	NDK96	M36	499	**SNS4084-Z-D**
NFR650/21,5	2	NTS500	441	435,5	NTC500	520	475	NDK500	M42	649	**SNS3088-Z-D**
NFR720/10	2	NTS500	471	465,5	NTC500	550	505	NDK500	M42	895	**SNS3188-Z-D**
NFR790/10	2	NTS560/480	481	475,5	NTC560/480	560	515	NDK560	M48	1 100	**SNS3288-Z-D**
NFR650/10	2	NTS500	441	435,5	NTC500	505	468	NDK500	M42	642	**SNS4088-Z-D**
NFR680/30,5	2	NTS530	471	465,5	NTC530	550	505	NDK530	M42	821	**SNS3092-Z-D**
NFR760/10	2	NTS530	481	475,5	NTC530	560	515	NDK530	M48	966	**SNS3192-Z-D**
NFR680/10	2	NTS530	471	465,5	NTC530	535	498	NDK530	M42	818	**SNS4092-Z-D**
NFR700/29,5	2	NTS530/510	471	465,5	NTC530/510	550	505	NDK530	M42	786	**SNS3096-Z-D**
NFR790/10	2	NTS560/520	481	475,5	NTC560/520	560	515	NDK560	M48	1 100	**SNS3196-Z-D**
NFR700/10	2	NTS530/510	471	465,5	NTC530/510	535	498	NDK530	M42	780	**SNS4096-Z-D**
NFR720/29,5	2	NTS560	471	465,5	NTC560	550	505	NDK560	M42	895	**SNS30/500-Z-D**
NFR720/10	2	NTS560	471	465,5	NTC560	535	498	NDK560	M42	895	**SNS40/500-Z-D**
NFR780/31,5	2	NTS600	481	475,5	NTC600	560	515	NDK600	M48	1 100	**SNS30/530-Z-D**
NFR780/10	2	NTS600	481	475,5	NTC600	545	508	NDK600	M48	1 100	**SNS40/530-Z-D**

Plummer block housings

SNS, split
For spherical roller bearings with tapered bore and adapter sleeve
Inch size shaft

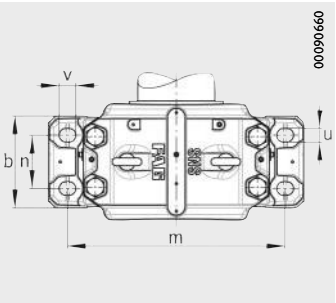

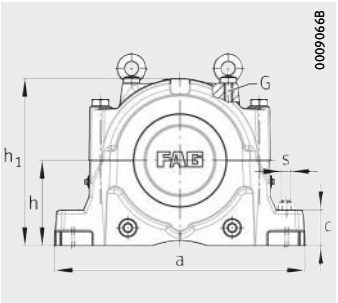

Dimension table · Dimensions in mm

Shaft		Housing Dimensions														Spherical roller bearing and accessories
d_1		h	h_1	g	b	c	a	m	n	v	u	s	D	k	e	Bearing
inch	mm															
$4^{7}/_{16}$	112,713	170	333	230	180	70	510	430	100	34	28	M24	280	108	14	**22326..-K**
$4^{1}/_{2}$	114,300	170	333	230	180	70	510	430	100	34	28	M24	280	108	14	**22326..-K**
$4^{15}/_{16}$	125,413	180	353	240	190	75	530	450	110	34	28	M24	300	116	15	**22328..-K**
5	127,000	180	353	240	190	75	530	450	110	34	28	M24	300	116	15	**22328..-K**
$5^{3}/_{16}$	131,763	190	375	260	210	80	560	480	120	34	28	M24	320	124	10	**22330..-K**
$5^{1}/_{4}$	133,350	190	375	260	210	80	560	480	120	34	28	M24	320	124	10	**22330..-K**
$5^{7}/_{16}$	138,113	180	353	240	190	75	530	450	110	34	28	M24	290	115	15	**22232..-K**
$5^{7}/_{16}$	138,113	210	411	280	230	85	610	510	130	42	35	M30	340	132	10	**22332..-K**
$5^{1}/_{2}$	139,700	180	353	240	190	75	530	450	110	34	28	M24	290	115	15	**22232..-K**
$5^{1}/_{2}$	139,700	210	411	280	230	85	610	510	130	42	35	M30	340	132	10	**22332..-K**
$5^{13}/_{16}$	147,638	190	375	260	210	80	560	480	120	34	28	M24	310	122	10	**22234..-K**
$5^{13}/_{16}$	147,638	220	434	290	240	90	640	540	140	42	35	M30	360	140	12	**22334..-K**
$5^{13}/_{16}$	147,638	190	375	260	210	80	560	480	120	34	28	M24	310	122	10	**23234..-K**
$5^{7}/_{8}$	149,225	190	375	260	210	80	560	480	120	34	28	M24	310	122	10	**22234..-K**
$5^{7}/_{8}$	149,225	220	434	290	240	90	640	540	140	42	35	M30	360	140	12	**22334..-K**
$5^{7}/_{8}$	149,225	190	375	260	210	80	560	480	120	34	28	M24	310	122	10	**23234..-K**
$5^{15}/_{16}$	150,813	190	375	260	210	80	560	480	120	34	28	M24	310	122	10	**22234..-K**
$5^{15}/_{16}$	150,813	220	434	290	240	90	640	540	140	42	35	M30	360	140	12	**22334..-K**
$5^{15}/_{16}$	150,813	170	333	230	180	70	510	430	100	34	28	M24	280	108	14	**23134..-K**
$5^{15}/_{16}$	150,813	170	333	230	180	70	510	430	100	34	28	M24	280	108	14	**231S.515**[1)]
$5^{15}/_{16}$	150,813	190	375	260	210	80	560	480	120	34	28	M24	310	122	10	**23234..-K**
6	152,400	190	375	260	210	80	560	480	120	34	28	M24	310	122	10	**22234..-K**
6	152,400	220	434	290	240	90	640	540	140	42	35	M30	360	140	12	**22334..-K**
6	152,400	170	333	230	180	70	510	430	100	34	28	M24	280	108	14	**23134..-K**
6	152,400	190	375	260	210	80	560	480	120	34	28	M24	310	122	10	**23234..-K**

① Locating bearing; ② Non-locating bearing

1) Split bearing in associated housing has restricted usability. Please ask for further information.

2) Alternatively also available with split labyrinth seal NTSG.

3) With NTSG: width g_L increased by 16 mm.

4) With NTSG: width g_{LD} increased by 8 mm.

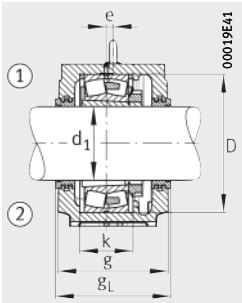

Labyrinth seal NTS

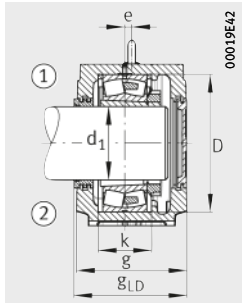

Labyrinth seal NTS
Cover NDK

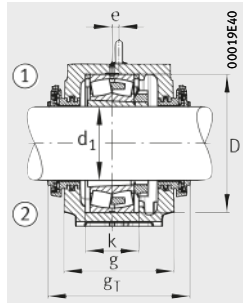

Taconite seal NTC

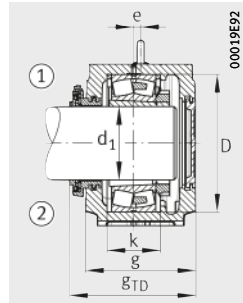

Taconite seal NTC
Cover NDK

										Housing		
Adapter sleeve	Locating ring		Labyrinth seal			Taconite seal			Cover	G	Mass	Designation
		Quantity		g_L mm	g_{LD} mm		g_T mm	g_{TD} mm			m ≈ kg	
H2326X407	NFR280/7,5	2	NTS34X407	241	235,5	NTC34X407	299	264	NDK34	M16	75	**SNS3134-H-D**
H2326X408	NFR280/7,5	2	NTS34X408	241	235,5	NTC34X408	299	264	NDK34	M16	75	**SNS3134-H-D**
H2328X415	NFR300/7	2	NTS36X415	251	245,5	NTC36X415	310	274,5	NDK36	M16	83	**SNS3136-H-D**
H2328X500	NFR300/7	2	NTS36X500	251	245,5	NTC36X500	310	274,5	NDK36	M16	83	**SNS3136-H-D**
H2330X503	NFR320/8	2	NTS38X503	271	265,5	NTC38X503	330	294,5	NDK38	M20	102	**SNS3138-H-D**
H2330X504	NFR320/8	2	NTS38X504	271	265,5	NTC38X504	330	294,5	NDK38	M20	102	**SNS3138-H-D**
H3132X507	NFR290/17,5	2	NTS38X507	251	245,5	NTC38X507	312	275,5	NDK38	M16	86	**SNS3038-H-D**
H2332X507	NFR340/9	2	NTS40X507	291	285,5	NTC40X507	347	313	NDK40	M20	133	**SNS3140-H-D**
H3132X508	NFR290/17,5	2	NTS38X508	251	245,5	NTC38X508	312	275,5	NDK38	M16	86	**SNS3038-H-D**
H2332X508	NFR340/9	2	NTS40X508	291	285,5	NTC40X508	347	313	NDK40	M20	133	**SNS3140-H-D**
H3134(-HG)X513	NFR310/18	2	NTS40X513	271	265,5	NTC40X513	327	293	NDK40	M20	105	**SNS3040-H-D**
H2334(-HG)X513	NFR360/10	2	NTS48X513	301	295,5	NTC48X513	380	335	NDK48	M20	148	**SNS3048-H-D**
H2334(-HG)X513	NFR310/6	2	NTS40X513	271	265,5	NTC40X513	326	293	NDK40	M20	105	**SNS3234-H-D**
H3134(-HG)X514	NFR310/18	2	NTS40X514	271	265,5	NTC40X514	326	293	NDK40	M20	105	**SNS3040-H-D**
H2334(-HG)X514	NFR360/10	2	NTS48X514	301	295,5	NTC48X514	380	335	NDK48	M20	148	**SNS3048-H-D**
H2334(-HG)X514	NFR310/6	2	NTS40X514	271	265,5	NTC40X514	326	293	NDK40	M20	105	**SNS3234-H-D**
H3134(-HG)X515	NFR310/18	2	NTS40X515	271	265,5	NTC40X515	326	293	NDK40	M20	105	**SNS3040-H-D**
H2334(-HG)X515	NFR360/10	2	NTS48X515	301	295,5	NTC48X515	380	335	NDK48	M20	148	**SNS3048-H-D**
H3134(-HG)X515	NFR280/10	2	NTS34X515[2]	241[3]	235,5[4]	NTC34X515	298	264	NDK34	M16	75	**SNS3134-H-D**
–	NFR280/10	2	NTS34X515[2]	241[3]	235,5[4]	NTC34X515	298	264	NDK34	M16	75	**SNS3134-H-D**
H2334(-HG)X515	NFR310/6	2	NTS40X515	271	265,5	NTC40X515	326	293	NDK40	M20	105	**SNS3234-H-D**
H3134(-HG)X600	NFR310/18	2	NTS40X600	271	265,5	NTC40X600	326	293	NDK40	M20	105	**SNS3040-H-D**
H2334(-HG)X600	NFR360/10	2	NTS48X600	301	295,5	NTC48X600	380	335	NDK48	M20	148	**SNS3048-H-D**
H3134(-HG)X600	NFR280/10	2	NTS34X600	241	235,5	NTC34X600	298	264	NDK34	M16	75	**SNS3134-H-D**
H2334(-HG)X600	NFR310/6	2	NTS40X600	271	265,5	NTC40X600	326	293	NDK40	M20	105	**SNS3234-H-D**

Plummer block housings

SNS, split
For spherical roller bearings with tapered bore and adapter sleeve
Inch size shaft

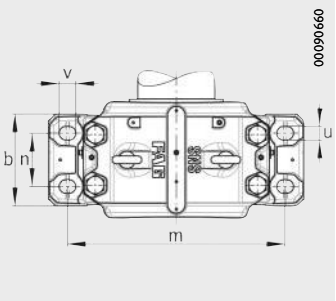

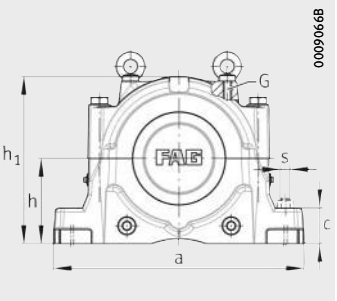

Dimension table (continued) · Dimensions in mm

Shaft		Housing Dimensions														Spherical roller bearing and accessories
d_1		h	h_1	g	b	c	a	m	n	v	u	s	D	k	e	Bearing
inch	mm															
$6^{5}/_{16}$	**160,338**	190	375	260	210	80	560	480	120	34	28	M24	320	124	10	**22236..-K**
$6^{5}/_{16}$	**160,338**	170	333	230	180	70	510	430	100	34	28	M24	280	108	14	**23036..-K**
$6^{3}/_{8}$	**161,925**	190	375	260	210	80	560	480	120	34	28	M24	320	124	10	**22236..-K**
$6^{3}/_{8}$	**161,925**	170	333	230	180	70	510	430	100	34	28	M24	280	108	14	**23036..-K**
$6^{7}/_{16}$	**163,513**	190	375	260	210	80	560	480	120	34	28	M24	320	124	10	**22236..-K**
$6^{7}/_{16}$	**163,513**	170	333	230	180	70	510	430	100	34	28	M24	280	108	14	**23036..-K**
$6^{7}/_{16}$	**163,513**	170	333	230	180	70	510	430	100	34	28	M24	280	108	14	**230S.607-MA**[1]
$6^{7}/_{16}$	**163,513**	180	353	240	190	75	530	450	110	34	28	M24	300	116	15	**23136..-K**
$6^{7}/_{16}$	**163,513**	180	353	240	190	75	530	450	110	34	28	M24	300	116	15	**231S.607-MA**[1]
$6^{7}/_{16}$	**163,513**	190	375	260	210	80	560	480	120	34	28	M24	320	124	10	**23236..-K**
$6^{1}/_{2}$	**165,100**	190	375	260	210	80	560	480	120	34	28	M24	320	124	10	**22236..-K**
$6^{1}/_{2}$	**165,100**	170	333	230	180	70	510	430	100	34	28	M24	280	108	14	**23036..-K**
$6^{1}/_{2}$	**165,100**	180	353	240	190	75	530	450	110	34	28	M24	300	116	15	**23136..-K**
$6^{1}/_{2}$	**165,100**	190	375	260	210	80	560	480	120	34	28	M24	320	124	10	**23236..-K**
$6^{3}/_{4}$	**171,450**	210	411	280	230	85	610	510	130	42	35	M30	340	132	10	**22238..-K**
$6^{3}/_{4}$	**171,450**	240	474	310	260	95	700	600	150	42	35	M30	400	148	12	**22338..-K**
$6^{3}/_{4}$	**171,450**	180	353	240	190	75	530	450	110	34	28	M24	290	115	15	**23038..-K**
$6^{3}/_{4}$	**171,450**	190	375	260	210	80	560	480	120	34	28	M24	320	124	10	**23138..-K**
$6^{3}/_{4}$	**171,450**	210	411	280	230	85	610	510	130	42	35	M30	340	132	10	**23238..-K**
$6^{13}/_{16}$	**173,038**	210	411	280	230	85	610	510	130	42	35	M30	340	132	10	**22238..-K**
$6^{13}/_{16}$	**173,038**	240	474	310	260	95	700	600	150	42	35	M30	400	148	12	**22338..-K**
$6^{13}/_{16}$	**173,038**	180	353	240	190	75	530	450	110	34	28	M24	290	115	15	**23038..-K**
$6^{13}/_{16}$	**173,038**	210	411	280	230	85	610	510	130	42	35	M30	340	132	10	**23238..-K**
$6^{7}/_{8}$	**174,625**	210	411	280	230	85	610	510	130	42	35	M30	340	132	10	**22238..-K**
$6^{7}/_{8}$	**174,625**	240	474	310	260	95	700	600	150	42	35	M30	400	148	12	**22338..-K**
$6^{7}/_{8}$	**174,625**	180	353	240	190	75	530	450	110	34	28	M24	290	115	15	**23038..-K**
$6^{7}/_{8}$	**174,625**	210	411	280	230	85	610	510	130	42	35	M30	340	132	10	**23238..-K**

① Locating bearing; ② Non-locating bearing

1) Split bearing in associated housing has restricted usability. Please ask for further information.

2) Alternatively also available with split labyrinth seal NTSG.

3) With NTSG: width g_L increased by 16 mm.

4) With NTSG: width g_{LD} increased by 8 mm.

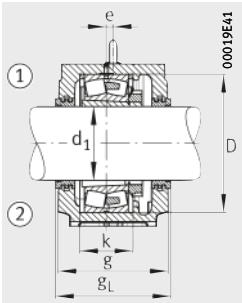

Labyrinth seal NTS

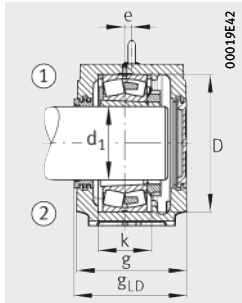

Labyrinth seal NTS
Cover NDK

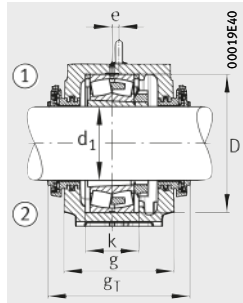

Taconite seal NTC

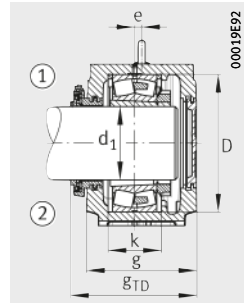

Taconite seal NTC
Cover NDK

										Housing		
Adapter sleeve	Locating ring		Labyrinth seal			Taconite seal			Cover	G	Mass	Designation
		Quantity		g_L mm	g_{LD} mm		g_T mm	g_{TD} mm			m ≈ kg	
H3136(-HG)X605	NFR320/19	2	NTS38X605	271	265,5	NTC38X605	329	294,5	NDK38	M20	102	**SNS3138-H-D**
H3036(-HG)X605	NFR280/17	2	NTS36X605	241	235,5	NTC36X605	299	264,5	NDK36	M16	74	**SNS3036-H-D**
H3136(-HG)X606	NFR320/19	2	NTS38X606	271	265,5	NTC38X606	329	294,5	NDK38	M20	102	**SNS3138-H-D**
H3036(-HG)X606	NFR280/17	2	NTS36X606	241	235,5	NTC36X606	299	264,5	NDK36	M16	74	**SNS3036-H-D**
H3136(-HG)X607	NFR320/19	2	NTS38X607	271	265,5	NTC38X607	329	294,5	NDK38	M20	102	**SNS3138-H-D**
H3036(-HG)X607	NFR280/17	2	NTS36X607[2)]	241[3)]	235,5[4)]	NTC36X607	299	264,5	NDK36	M16	74	**SNS3036-H-D**
–	NFR280/17	2	NTS36X607[2)]	241[3)]	235,5[4)]	NTC36X607	299	264,5	NDK36	M16	74	**SNS3036-H-D**
H3136(-HG)X607	NFR300/10	2	NTS36X607[2)]	251[3)]	245,5[4)]	NTC36X607	309	274,5	NDK36	M16	83	**SNS3136-H-D**
–	NFR300/10	2	NTS36X607[2)]	251[3)]	245,5[4)]	NTC36X607	309	274,5	NDK36	M16	83	**SNS3136-H-D**
H2336(-HG)X607	NFR320/6	2	NTS38X607	271	265,5	NTC38X607	329	294,5	NDK38	M20	102	**SNS3236-H-D**
H3136(-HG)X608	NFR320/19	2	NTS38X608	271	265,5	NTC38X608	329	294,5	NDK38	M20	102	**SNS3138-H-D**
H3036(-HG)X608	NFR280/17	2	NTS36X608	241	235,5	NTC36X608	299	264,5	NDK36	M16	74	**SNS3036-H-D**
H3136(-HG)X608	NFR300/10	2	NTS36X608	251	245,5	NTC36X608	309	274,5	NDK36	M16	83	**SNS3136-H-D**
H2336(-HG)X608	NFR320/6	2	NTS38X608	271	265,5	NTC38X608	329	294,5	NDK38	M20	102	**SNS3236-H-D**
H3138(-HG)X612	NFR340/10	4	NTS40X612	291	285,5	NTC40X612	346	313	NDK40	M20	133	**SNS3140-H-D**
H2338(-HG)X612	NFR400/8	2	NTS48X612	321	315,5	NTC48X612	400	355	NDK48	M24	184	**SNS3148-H-D**
H3038(-HG)X612	NFR290/10	4	NTS38X612	251	245,5	NTC38X612	311	275,5	NDK38	M16	86	**SNS3038-H-D**
H3138(-HG)X612	NFR320/10	2	NTS38X612	271	265,5	NTC38X612	329	294,5	NDK38	M20	102	**SNS3138-H-D**
H2338(-HG)X612	NFR340/6	2	NTS40X612	291	285,5	NTC40X612	346	313	NDK40	M20	133	**SNS3238-H-D**
H3138(-HG)X613	NFR340/10	4	NTS40X613	291	285,5	NTC40X613	346	313	NDK40	M20	133	**SNS3140-H-D**
H2338(-HG)X613	NFR400/8	2	NTS48X613	321	315,5	NTC48X613	400	355	NDK48	M24	184	**SNS3148-H-D**
H3038(-HG)X613	NFR290/10	4	NTS38X613	251	245,5	NTC38X613	311	275,5	NDK38	M16	86	**SNS3038-H-D**
H2338(-HG)X613	NFR340/6	2	NTS40X613	291	285,5	NTC40X613	346	313	NDK40	M20	133	**SNS3238-H-D**
H3138(-HG)X614	NFR340/10	4	NTS40X614	291	285,5	NTC40X614	346	313	NDK40	M20	133	**SNS3140-H-D**
H2338(-HG)X614	NFR400/8	2	NTS48X614	321	315,5	NTC48X614	400	355	NDK48	M24	184	**SNS3148-H-D**
H3038(-HG)X614	NFR290/10	4	NTS38X614	251	245,5	NTC38X614	311	275,5	NDK38	M16	86	**SNS3038-H-D**
H2338(-HG)X614	NFR340/6	2	NTS40X614	291	285,5	NTC40X614	346	313	NDK40	M20	133	**SNS3238-H-D**

Plummer block housings

SNS, split
For spherical roller bearings with tapered bore and adapter sleeve
Inch size shaft

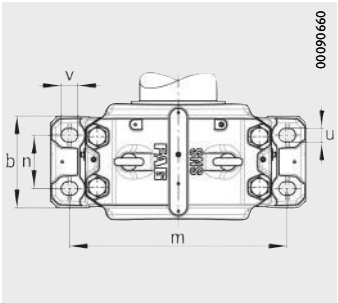

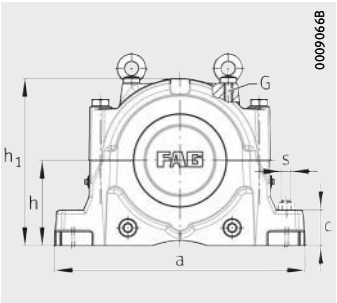

Dimension table (continued) · Dimensions in mm

Shaft		Housing Dimensions														Spherical roller bearing and accessories
d_1		h	h_1	g	b	c	a	m	n	v	u	s	D	k	e	Bearing
inch	mm															
$6^{15}/_{16}$	**176,213**	210	411	280	230	85	610	510	130	42	35	M30	340	132	10	**22238..-K**
$6^{15}/_{16}$	**176,213**	240	474	310	260	95	700	600	150	42	35	M30	400	148	12	**22338..-K**
$6^{15}/_{16}$	**176,213**	180	353	240	190	75	530	450	110	34	28	M24	290	115	15	**23038..-K**
$6^{15}/_{16}$	**176,213**	190	375	260	210	80	560	480	120	34	28	M24	320	124	10	**23138..-K**
$6^{15}/_{16}$	**176,213**	190	375	260	210	80	560	480	120	34	28	M24	320	124	10	**231S.615**
$6^{15}/_{16}$	**176,213**	210	411	280	230	85	610	510	130	42	35	M30	340	132	10	**23238..-K**
7	**177,800**	210	411	280	230	85	610	510	130	42	35	M30	340	132	10	**22238..-K**
7	**177,800**	220	434	290	240	90	640	540	140	42	35	M30	360	140	12	**22240..-K**
7	**177,800**	240	474	310	260	95	700	600	150	42	35	M30	400	148	12	**22338..-K**
7	**177,800**	260	516	320	280	100	770	650	160	50	42	M36	420	166	13	**22340..-K**
7	**177,800**	180	353	240	190	75	530	450	110	34	28	M24	290	115	15	**23038..-K**
7	**177,800**	180	353	240	190	75	530	450	110	34	28	M24	290	115	15	**230S.700**[1)]
7	**177,800**	190	375	260	210	80	560	480	120	34	28	M24	310	122	10	**23040..-K**
7	**177,800**	210	411	280	230	85	610	510	130	42	35	M30	340	132	10	**23140..-K**
7	**177,800**	210	411	280	230	85	610	510	130	42	35	M30	340	132	10	**231S.700**
7	**177,800**	210	411	280	230	85	610	510	130	42	35	M30	340	132	10	**23238..-K**
7	**177,800**	220	434	290	240	90	640	540	140	42	35	M30	360	140	12	**23240..-K**
$7^{1}/_{8}$	**180,975**	220	434	290	240	90	640	540	140	42	35	M30	360	140	12	**22240..-K**
$7^{1}/_{8}$	**180,975**	260	516	320	280	100	770	650	160	50	42	M36	420	166	13	**22340..-K**
$7^{1}/_{8}$	**180,975**	190	375	260	210	80	560	480	120	34	28	M24	310	122	10	**23040..-K**
$7^{1}/_{8}$	**180,975**	220	434	290	240	90	640	540	140	42	35	M30	360	140	12	**23240..-K**
$7^{3}/_{16}$	**182,563**	220	434	290	240	90	640	540	140	42	35	M30	360	140	12	**22240..-K**
$7^{3}/_{16}$	**182,563**	260	516	320	280	100	770	650	160	50	42	M36	420	166	13	**22340..-K**
$7^{3}/_{16}$	**182,563**	190	375	260	210	80	560	480	120	34	28	M24	310	122	10	**23040..-K**
$7^{3}/_{16}$	**182,563**	210	411	280	230	85	610	510	130	42	35	M30	340	132	10	**23140..-K**
$7^{3}/_{16}$	**182,563**	220	434	290	240	90	640	540	140	42	35	M30	360	140	12	**23240..-K**

① Locating bearing; ② Non-locating bearing

1) Split bearing in associated housing has restricted usability.
Please ask for further information.

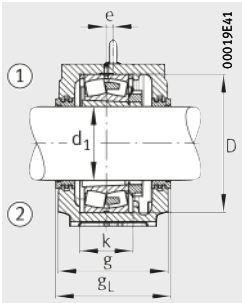

Labyrinth seal NTS

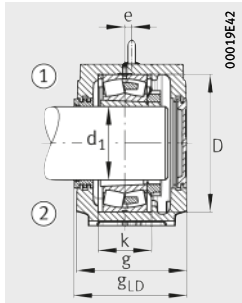

Labyrinth seal NTS
Cover NDK

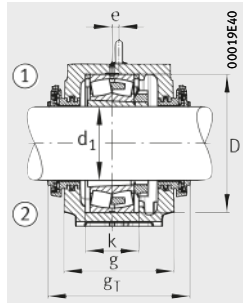

Taconite seal NTC

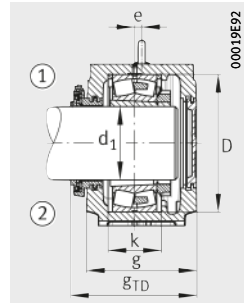

Taconite seal NTC
Cover NDK

										Housing		
Adapter sleeve	Locating ring		Labyrinth seal			Taconite seal			Cover	G	Mass	Designation
		Quantity		g_L mm	g_{LD} mm		g_T mm	g_{TD} mm			m ≈ kg	
H3138(-HG)X615	NFR340/10	4	NTS40X615	291	285,5	NTC40X615	346	313	NDK40	M20	133	**SNS3140-H-D**
H2338(-HG)X615	NFR400/8	2	NTS48X615	321	315,5	NTC48X615	400	355	NDK48	M24	184	**SNS3148-H-D**
H3038(-HG)X615	NFR290/10	4	NTS38X615	251	245,5	NTC38X615	309	274,5	NDK38	M16	86	**SNS3038-H-D**
H3138(-HG)X615	NFR320/10	2	NTS38X615	271	265,5	NTC38X615	329	294,5	NDK38	M20	102	**SNS3138-H-D**
–	NFR320/10	2	NTS38X615	271	265,5	NTC38X615	329	294,5	NDK38	M20	102	**SNS3138-H-D**
H2338(-HG)X615	NFR340/6	2	NTS40X615	291	285,5	NTC40X615	346	313	NDK40	M20	133	**SNS3238-H-D**
H3138(-HG)X700	NFR340/10	4	NTS40X700	291	285,5	NTC40X700	346	313	NDK40	M20	133	**SNS3140-H-D**
H3140(-HG)X700	NFR360/21	2	NTS48X700	301	295,5	NTC48X700	380	335	NDK48	M20	148	**SNS3048-H-D**
H2338(-HG)X700	NFR400/8	2	NTS48X700	321	315,5	NTC48X700	400	355	NDK48	M24	184	**SNS3148-H-D**
H2340(-HG)X700	NFR420/14	2	NTS56X700	331	325,5	NTC56X700	410	365	NDK56	M24	249	**SNS3056-H-D**
H3038(-HG)X700	NFR290/10	4	NTS38X700	251	245,5	NTC38X700	311	275,5	NDK38	M16	86	**SNS3038-H-D**
–	NFR290/10	4	NTS38X700	251	245,5	NTC38X700	311	275,5	NDK38	M16	86	**SNS3038-H-D**
H3040(-HG)X700	NFR310/10	4	NTS40X700	271	265,5	NTC40X700	326	293	NDK40	M20	105	**SNS3040-H-D**
H3140(-HG)X700	NFR340/10	2	NTS40X700	291	285,5	NTC40X700	346	313	NDK40	M20	133	**SNS3140-H-D**
–	NFR340/10	2	NTS40X700	291	285,5	NTC40X700	346	313	NDK40	M20	133	**SNS3140-H-D**
H2338(-HG)X700	NFR340/6	2	NTS40X700	291	285,5	NTC40X700	346	313	NDK40	M20	133	**SNS3238-H-D**
H2340(-HG)X700	NFR360/6	2	NTS48X700	301	295,5	NTC48X700	380	335	NDK48	M20	148	**SNS3240-H-D**
H3140(-HG)X702	NFR360/21	2	NTS48X702	301	295,5	NTC48X702	380	335	NDK48	M20	148	**SNS3048-H-D**
H2340(-HG)X702	NFR420/14	2	NTS56X702	331	325,5	NTC56X702	410	365	NDK56	M24	249	**SNS3056-H-D**
H3040(-HG)X702	NFR310/10	4	NTS40X702	271	265,5	NTC40X702	326	293	NDK40	M20	105	**SNS3040-H-D**
H2340(-HG)X702	NFR360/6	2	NTS48X702	301	295,5	NTC48X702	380	335	NDK48	M20	148	**SNS3240-H-D**
H3140(-HG)X703	NFR360/21	2	NTS48X703	301	295,5	NTC48X703	380	335	NDK48	M20	148	**SNS3048-H-D**
H2340(-HG)X703	NFR420/14	2	NTS56X703	331	325,5	NTC56X703	410	365	NDK56	M24	249	**SNS3056-H-D**
H3040(-HG)X703	NFR310/10	4	NTS40X703	271	265,5	NTC40X703	326	293	NDK40	M20	105	**SNS3040-H-D**
H3140(-HG)X703	NFR340/10	2	NTS40X703	291	285,5	NTC40X703	346	313	NDK40	M20	133	**SNS3140-H-D**
H2340(-HG)X703	NFR360/6	2	NTS48X703	301	295,5	NTC48X703	380	335	NDK48	M20	148	**SNS3240-H-D**

Plummer block housings

SNS, split
For spherical roller bearings with tapered bore and adapter sleeve
Inch size shaft

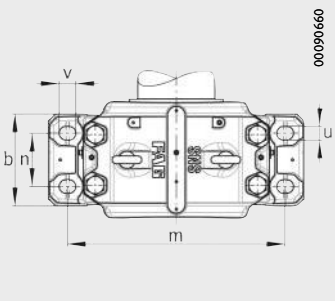

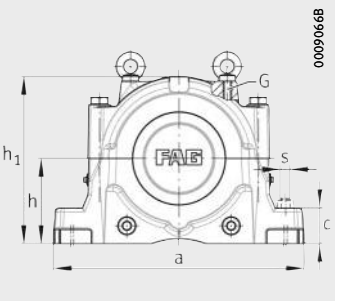

Dimension table (continued) · Dimensions in mm

Shaft		Housing Dimensions														Spherical roller bearing and accessories
d_1		h	h_1	g	b	c	a	m	n	v	u	s	D	k	e	Bearing
inch	mm															
$7^1/_4$	**184,150**	220	434	290	240	90	640	540	140	42	35	M30	360	140	12	**22240..-K**
$7^1/_4$	**184,150**	260	516	320	280	100	770	650	160	50	42	M36	420	166	13	**22340..-K**
$7^1/_4$	**184,150**	190	375	260	210	80	560	480	120	34	28	M24	310	122	10	**23040..-K**
$7^1/_4$	**184,150**	220	434	290	240	90	640	540	140	42	35	M30	360	140	12	**23240..-K**
$7^{13}/_{16}$	**198,438**	240	474	310	260	95	700	600	150	42	35	M30	400	148	12	**22244..-K**
$7^{13}/_{16}$	**198,438**	210	411	280	230	85	610	510	130	42	35	M30	340	130	10	**23044..-K**
$7^7/_8$	**200,025**	240	474	310	260	95	700	600	150	42	35	M30	400	148	12	**22244..-K**
$7^7/_8$	**200,025**	210	411	280	230	85	610	510	130	42	35	M30	340	130	10	**23044..-K**
$7^{15}/_{16}$	**201,613**	240	474	310	260	95	700	600	150	42	35	M30	400	148	12	**22244..-K**
$7^{15}/_{16}$	**201,613**	280	550	320	280	105	790	670	160	50	42	M36	460	166	16	**22344..-K**
$7^{15}/_{16}$	**201,613**	210	411	280	230	85	610	510	130	42	35	M30	340	130	10	**23044..-K**
$7^{15}/_{16}$	**201,613**	220	434	290	240	90	640	540	140	42	35	M30	370	140	12	**23144..-K**
$7^{15}/_{16}$	**201,613**	240	474	310	260	95	700	600	150	42	35	M30	400	164	12	**23244..-K**
8	**203,200**	240	474	310	260	95	700	600	150	42	35	M30	400	148	12	**22244..-K**
8	**203,200**	210	411	280	230	85	610	510	130	42	35	M30	340	130	10	**23044..-K**
$8^7/_{16}$	**214,313**	260	516	320	280	100	770	650	160	50	42	M36	440	164	13	**22248..-K**
$8^7/_{16}$	**214,313**	220	434	290	240	90	640	540	140	42	35	M30	360	140	12	**23048..-K**
$8^7/_{16}$	**214,313**	220	434	290	240	90	640	540	140	42	35	M30	360	140	12	**230S.807**[1)]
$8^1/_2$	**215,900**	260	516	320	280	100	770	650	160	50	42	M36	440	164	13	**22248..-K**
$8^1/_2$	**215,900**	220	434	290	240	90	640	540	140	42	35	M30	360	140	12	**23048..-K**
$8^1/_2$	**215,900**	220	434	290	240	90	640	540	140	42	35	M30	360	140	12	**230S.808**[1)]
$8^{15}/_{16}$	**227,013**	260	516	320	280	100	770	650	160	50	42	M36	440	164	13	**22248..-K**
$8^{15}/_{16}$	**227,013**	300	591	350	310	110	830	710	190	50	42	M36	500	180	22	**22348..-K**
$8^{15}/_{16}$	**227,013**	220	434	290	240	90	640	540	140	42	35	M30	360	140	12	**23048..-K**
$8^{15}/_{16}$	**227,013**	240	474	310	260	95	700	600	150	42	35	M30	400	148	12	**23148..-K**
$8^{15}/_{16}$	**227,013**	260	516	320	280	100	770	650	160	50	42	M36	440	180	13	**23248..-K**

① Locating bearing; ② Non-locating bearing

1) Split bearing in associated housing has restricted usability.
Please ask for further information.

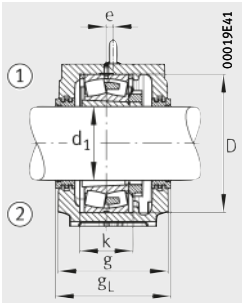

Labyrinth seal NTS

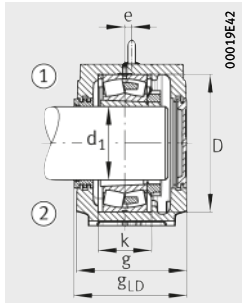

Labyrinth seal NTS Cover NDK

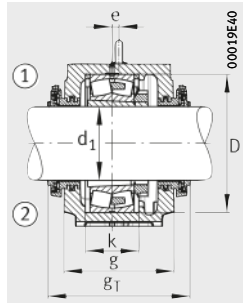

Taconite seal NTC

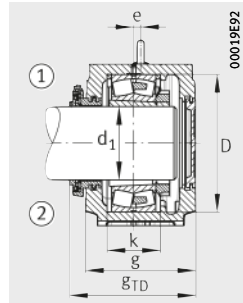

Taconite seal NTC Cover NDK

										Housing		
Adapter sleeve	Locating ring		Labyrinth seal			Taconite seal			Cover	G	Mass	Designation
		Quantity		g_L mm	g_{LD} mm		g_T mm	g_{TD} mm			m ≈ kg	
H3140(-HG)X704	NFR360/21	2	NTS48X704	301	295,5	NTC48X704	380	335	NDK48	M20	148	**SNS3048-H-D**
H2340(-HG)X704	NFR420/14	2	NTS56X704	331	325,5	NTC56X704	410	365	NDK56	M24	249	**SNS3056-H-D**
H3040(-HG)X704	NFR310/10	4	NTS40X704	271	265,5	NTC40X704	326	293	NDK40	M20	105	**SNS3040-H-D**
H2340(-HG)X704	NFR360/6	2	NTS48X704	301	295,5	NTC48X704	380	335	NDK48	M20	148	**SNS3240-H-D**
H3144X(-HG)X713	NFR400/10	4	NTS48X713	321	315,5	NTC48X713	400	355	NDK48	M24	184	**SNS3148-H-D**
H3044(-HG)X713	NFR340/10	4	NTS44X713	291	285,5	NTC44X713	370	325	NDK44	M20	129	**SNS3044-H-D**
H3144X(-HG)X714	NFR400/10	4	NTS48X714	321	315,5	NTC48X714	400	355	NDK48	M24	184	**SNS3148-H-D**
H3044(-HG)X714	NFR340/10	4	NTS44X714	291	285,5	NTC44X714	370	325	NDK44	M20	129	**SNS3044-H-D**
H3144X(-HG)X715	NFR400/10	4	NTS48X715	321	315,5	NTC48X715	400	355	NDK48	M24	184	**SNS3148-H-D**
H2344(-HG)X715	NFR460/10,5	2	NTS56X715	331	325,5	NTC56X715	410	365	NDK56	M24	264	**SNS3156-H-D**
H3044(-HG)X715	NFR340/10	4	NTS44X715	291	285,5	NTC44X715	370	325	NDK44	M20	129	**SNS3044-H-D**
H3144X(-HG)X715	NFR370/10	2	NTS44X715	301	295,5	NTC44X715	380	335	NDK44	M20	146	**SNS3144-H-D**
H2344(-HG)X715	NFR400/10	2	NTS48X715	321	315,5	NTC48X715	400	355	NDK48	M24	183	**SNS3244-H-D**
H3144X(-HG)X800	NFR400/10	4	NTS48X800	321	315,5	NTC48X800	400	355	NDK48	M24	184	**SNS3148-H-D**
H3044(-HG)X800	NFR340/10	4	NTS44X800	291	285,5	NTC44X800	370	325	NDK44	M20	129	**SNS3044-H-D**
H3148X(-HG)X807	NFR440/22	2	NTS52X807	331	325,5	NTC52X807	410	365	NDK52	M24	238	**SNS3152-H-D**
H3048(-HG)X807	NFR360/12	4	NTS48X807	301	295,5	NTC48X807	380	335	NDK48	M20	148	**SNS3048-H-D**
–	NFR360/12	4	NTS48X807	301	295,5	NTC48X807	380	335	NDK48	M20	148	**SNS3048-H-D**
H3148X(-HG)X808	NFR440/22	2	NTS52X808	331	325,5	NTC52X808	410	365	NDK52	M24	238	**SNS3152-H-D**
H3048(-HG)X808	NFR360/12	4	NTS48X808	301	295,5	NTC48X808	380	335	NDK48	M20	148	**SNS3048-H-D**
–	NFR360/12	4	NTS48X808	301	295,5	NTC48X808	380	335	NDK48	M20	148	**SNS3048-H-D**
H3148X(-HG)X815	NFR440/22	2	NTS52X815	331	325,5	NTC52X815	410	365	NDK52	M24	238	**SNS3152-H-D**
H2348(-HG)X815	NFR500/12,5	2	NTS60X815	361	355,5	NTC60X815	440	395	NDK60	M30	317	**SNS3160-H-D**
H3048(-HG)X815	NFR360/12	4	NTS48X815	301	295,5	NTC48X815	380	335	NDK48	M20	148	**SNS3048-H-D**
H3148X(-HG)X815	NFR400/10	2	NTS48X815	321	315,5	NTC48X815	400	355	NDK48	M24	184	**SNS3148-H-D**
H2348(-HG)X815	NFR440/10	2	NTS52X815	331	325,5	NTC52X815	410	365	NDK52	M24	235	**SNS3248-H-D**

Plummer block housings

SNS, split
For spherical roller bearings with tapered bore and adapter sleeve
Inch size shaft

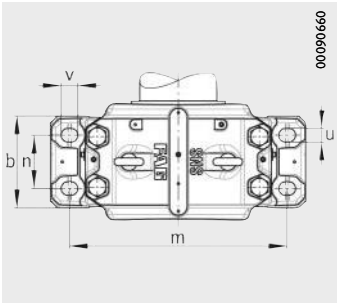

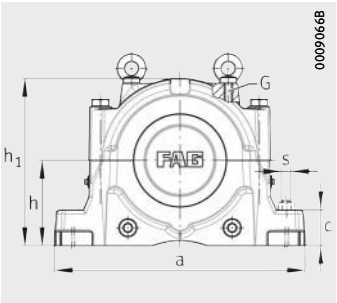

Dimension table (continued) · Dimensions in mm

Shaft		Housing Dimensions														Spherical roller bearing and accessories
d_1		h	h_1	g	b	c	a	m	n	v	u	s	D	k	e	Bearing
inch	mm															
$9^{7}/_{16}$	**239,713**	240	474	310	260	95	700	600	150	42	35	M30	400	148	12	**23052..-K**
$9^{7}/_{16}$	**239,713**	260	516	320	280	100	770	650	160	50	42	M36	440	164	13	**23152..-K**
$9^{7}/_{16}$	**239,713**	260	516	320	280	100	770	650	160	50	42	M36	440	164	13	**231S.907**[1)]
$9^{7}/_{16}$	**239,713**	300	591	350	310	110	830	710	190	50	42	M36	480	194	22	**23252..-K**
$9^{1}/_{2}$	**241,300**	300	591	350	310	110	830	710	190	50	42	M36	480	181	22	**22252..-K**
$9^{1}/_{2}$	**241,300**	320	631	370	330	115	880	750	200	50	42	M36	540	196	23	**22352..-K**
$9^{1}/_{2}$	**241,300**	240	474	310	260	95	700	600	150	42	35	M30	400	148	12	**23052..-K**
$9^{1}/_{2}$	**241,300**	240	474	310	260	95	700	600	150	42	35	M30	400	148	12	**230S.908**
$9^{1}/_{2}$	**241,300**	260	516	320	280	100	770	650	160	50	42	M36	440	164	13	**23152..-K**
$9^{1}/_{2}$	**241,300**	260	516	320	280	100	770	650	160	50	42	M36	440	164	13	**231S.908**[1)]
$9^{1}/_{2}$	**241,300**	300	591	350	310	110	830	710	190	50	42	M36	480	194	22	**23252..-K**
$9^{15}/_{16}$	**252,413**	260	516	320	280	100	770	650	160	50	42	M36	420	166	13	**23056..-K**
10	**254,000**	300	591	350	310	110	830	710	190	50	42	M36	500	180	22	**22256..-K**
10	**254,000**	260	516	320	280	100	770	650	160	50	42	M36	420	166	13	**23056..-K**
10	**254,000**	260	516	320	280	100	770	650	160	50	42	M36	420	166	13	**230S.1000**[1)]
10	**254,000**	280	550	320	280	105	790	670	160	50	42	M36	460	166	16	**23156..-K**
10	**254,000**	280	550	320	280	105	790	670	160	50	42	M36	460	166	16	**231S.1000**
$10^{7}/_{16}$	**265,113**	300	591	350	310	110	830	710	190	50	42	M36	500	180	22	**22256..-K**
$10^{7}/_{16}$	**265,113**	340	675	400	360	120	950	810	220	50	42	M36	580	210	24	**22356..-K**
$10^{7}/_{16}$	**265,113**	260	516	320	280	100	770	650	160	50	42	M36	420	166	13	**23056..-K**
$10^{7}/_{16}$	**265,113**	280	550	320	280	105	790	670	160	50	42	M36	460	166	16	**23156..-K**
$10^{7}/_{16}$	**265,113**	300	591	350	310	110	830	710	190	50	42	M36	500	196	22	**23256..-K**
$10^{1}/_{2}$	**266,700**	300	591	350	310	110	830	710	190	50	42	M36	500	180	22	**22256..-K**
$10^{1}/_{2}$	**266,700**	340	675	400	360	120	950	810	220	50	42	M36	580	210	24	**22356..-K**
$10^{1}/_{2}$	**266,700**	260	516	320	280	100	770	650	160	50	42	M36	420	166	13	**23056..-K**
$10^{1}/_{2}$	**266,700**	280	550	320	280	105	790	670	160	50	42	M36	460	166	16	**23156..-K**
$10^{1}/_{2}$	**266,700**	300	591	350	310	110	830	710	190	50	42	M36	500	196	22	**23256..-K**

① Locating bearing; ② Non-locating bearing

1) Split bearing in associated housing has restricted usability.
Please ask for further information.

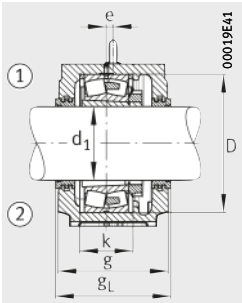

Labyrinth seal NTS

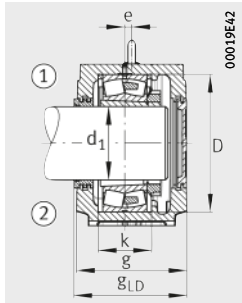

Labyrinth seal NTS
Cover NDK

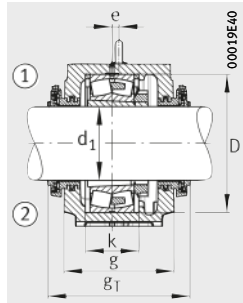

Taconite seal NTC

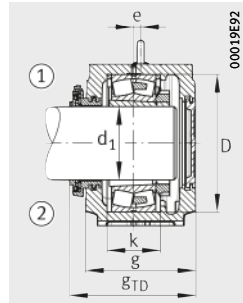

Taconite seal NTC
Cover NDK

										Housing		
Adapter sleeve	Locating ring		Labyrinth seal			Taconite seal			Cover	G	Mass	Designation
		Quantity		g_L mm	g_{LD} mm		g_T mm	g_{TD} mm			m ≈ kg	
H3052(-HG)X907	NFR400/22	2	NTS52X907	321	315,5	NTC52X907	400	355	NDK52	M24	180	**SNS3052-H-D**
H3152X(-HG)X907	NFR440/10	2	NTS52X907	331	325,5	NTC52X907	410	365	NDK52	M24	238	**SNS3152-H-D**
–	NFR440/10	2	NTS52X907	331	325,5	NTC52X907	410	365	NDK52	M24	238	**SNS3152-H-D**
H2352(-HG)X907	NFR480/10	2	NTS64X907	361	355,5	NTC64X907	440	395	NDK64	M30	331	**SNS3252-H-D**
H3152X(-HG)X908	NFR480/25,5	2	NTS64X908	361	355,5	NTC64X908	440	395	NDK64	M30	332	**SNS3064-H-D**
H2352(-HG)X908	NFR540/15,5	2	NTS64X908	381	375,5	NTC64X908	460	415	NDK64	M30	368	**SNS3164-H-D**
H3052(-HG)X908	NFR400/22	2	NTS52X908	321	315,5	NTC52X908	400	355	NDK52	M24	180	**SNS3052-H-D**
–	NFR400/22	2	NTS52X908	321	315,5	NTC52X908	400	355	NDK52	M24	180	**SNS3052-H-D**
H3152X(-HG)X908	NFR440/10	2	NTS52X908	331	325,5	NTC52X908	410	365	NDK52	M24	238	**SNS3152-H-D**
–	NFR440/10	2	NTS52X908	331	325,5	NTC52X908	410	365	NDK52	M24	238	**SNS3152-H-D**
H2352(-HG)X908	NFR480/10	2	NTS64X908	361	355,5	NTC64X908	440	395	NDK64	M30	331	**SNS3252-H-D**
H3056(-HG)X915	NFR420/10	6	NTS56X915	331	325,5	NTC56X915	410	365	NDK56	M24	249	**SNS3056-H-D**
H3156X(-HG)X1000	NFR500/25	2	NTS60X1000	361	355,5	NTC60X1000	440	395	NDK60	M30	317	**SNS3160-H-D**
H3056(-HG)X1000	NFR420/10	6	NTS56X1000	331	325,5	NTC56X1000	410	365	NDK56	M24	249	**SNS3056-H-D**
–	NFR420/10	6	NTS56X1000	331	325,5	NTC56X1000	410	365	NDK56	M24	249	**SNS3056-H-D**
H3156X(-HG)X1000	NFR460/10	2	NTS56X1000	331	325,5	NTC56X1000	410	365	NDK56	M24	264	**SNS3156-H-D**
–	NFR460/10	2	NTS56X1000	331	325,5	NTC56X1000	410	365	NDK56	M24	264	**SNS3156-H-D**
H3156X(-HG)X1007	NFR500/25	2	NTS60X1007	361	355,5	NTC60X1007	440	395	NDK60	M30	317	**SNS3160-H-D**
H2356(-HG)X1007	NFR580/17,5	2	NTS68X1007	411	405,5	NTC68X1007	490	445	NDK68	M30	461	**SNS3168-H-D**
H3056(-HG)X1007	NFR420/10	6	NTS56X1007	331	325,5	NTC56X1007	410	365	NDK56	M24	249	**SNS3056-H-D**
H3156X(-HG)X1007	NFR460/10	2	NTS56X1007	331	325,5	NTC56X1007	410	365	NDK56	M24	264	**SNS3156-H-D**
H2356(-HG)X1007	NFR500/10	2	NTS60X1007	361	355,5	NTC60X1007	440	395	NDK60	M30	314	**SNS3256-H-D**
H3156X(-HG)X1008	NFR500/25	2	NTS60X1008	361	355,5	NTC60X1008	440	395	NDK60	M30	317	**SNS3160-H-D**
H2356(-HG)X1008	NFR580/17,5	2	NTS68X1008	411	405,5	NTC68X1008	490	445	NDK68	M30	461	**SNS3168-H-D**
H3056(-HG)X1008	NFR420/10	6	NTS56X1008	331	325,5	NTC56X1008	410	365	NDK56	M24	249	**SNS3056-H-D**
H3156X(-HG)X1008	NFR460/10	2	NTS56X1008	331	325,5	NTC56X1008	410	365	NDK56	M24	264	**SNS3156-H-D**
H2356(-HG)X1008	NFR500/10	2	NTS60X1008	361	355,5	NTC60X1008	440	395	NDK60	M30	314	**SNS3256-H-D**

Plummer block housings

SNS, split
For spherical roller bearings with tapered bore and adapter sleeve
Inch size shaft

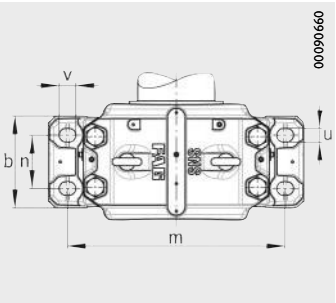

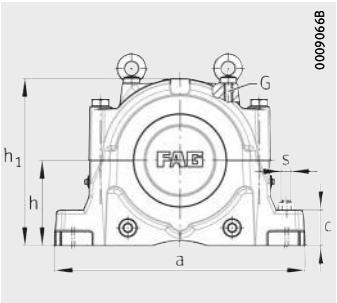

Dimension table (continued) · Dimensions in mm

Shaft		Housing Dimensions														Spherical roller bearing and accessories
d_1		h	h_1	g	b	c	a	m	n	v	u	s	D	k	e	Bearing
inch	mm															
$10^{15}/_{16}$	**277,813**	320	631	370	330	115	880	750	200	50	42	M36	540	196	23	**22260..-K**
$10^{15}/_{16}$	**277,813**	280	550	320	280	105	790	670	160	50	42	M36	460	168	16	**23060..-K**
$10^{15}/_{16}$	**277,813**	280	550	320	280	105	790	670	160	50	42	M36	460	168	16	**230S.1015**[1)]
$10^{15}/_{16}$	**277,813**	300	591	350	310	110	830	710	190	50	42	M36	500	180	22	**23160..-K**
$10^{15}/_{16}$	**277,813**	320	631	370	330	115	880	750	200	50	42	M36	540	212	23	**23260..-K**
11	**279,400**	320	631	370	330	115	880	750	200	50	42	M36	540	196	23	**22260..-K**
11	**279,400**	280	550	320	280	105	790	670	160	50	42	M36	460	168	16	**23060..-K**
11	**279,400**	280	550	320	280	105	790	670	160	50	42	M36	460	168	16	**230S.1100**[1)]
11	**279,400**	300	591	350	310	110	830	710	190	50	42	M36	500	180	22	**23160..-K**
11	**279,400**	300	591	350	310	110	830	710	190	50	42	M36	500	180	22	**231S.1100**[1)]
11	**279,400**	320	631	370	330	115	880	750	200	50	42	M36	540	212	23	**23260..-K**
$11^{7}/_{16}$	**290,513**	300	591	350	310	110	830	710	190	50	42	M36	480	181	22	**23064..-K**
$11^{1}/_{2}$	**292,100**	340	675	400	360	120	950	810	220	50	42	M36	580	190	24	**22264..-K**
$11^{1}/_{2}$	**292,100**	300	591	350	310	110	830	710	190	50	42	M36	480	181	22	**23064..-K**
$11^{15}/_{16}$	**303,213**	300	591	350	310	110	830	710	190	50	42	M36	480	181	22	**23064..-K**
$11^{15}/_{16}$	**303,213**	320	631	370	330	115	880	750	200	50	42	M36	540	196	23	**23164..-K**
$11^{15}/_{16}$	**303,213**	340	675	400	360	120	950	810	220	50	42	M36	580	228	24	**23264..-K**
12	**304,800**	340	675	400	360	120	950	810	220	50	42	M36	580	190	24	**22264..-K**
12	**304,800**	300	591	350	310	110	830	710	190	50	42	M36	480	181	22	**23064..-K**
12	**304,800**	300	591	350	310	110	830	710	190	50	42	M36	480	181	22	**230S.1200**[1)]
12	**304,800**	320	631	370	330	115	880	750	200	50	42	M36	540	196	23	**23164..-K**
12	**304,800**	320	631	370	330	115	880	750	200	50	42	M36	540	196	23	**231S.1200**[1)]
12	**304,800**	340	675	400	360	120	950	810	220	50	42	M36	580	228	24	**23264..-K**
12	**304,800**	340	675	400	360	120	950	810	220	50	42	M36	580	228	24	**232S.1200**[1)]
$12^{7}/_{16}$	**315,913**	320	631	370	330	115	880	750	200	50	42	M36	520	197	23	**23068..-K**
$12^{7}/_{16}$	**315,913**	340	675	400	360	120	950	810	220	50	42	M36	580	210	24	**23168..-K**
$12^{7}/_{16}$	**315,913**	360	715	400	360	120	1 040	870	220	50	42	M36	620	244	30	**23268..-K**

① Locating bearing; ② Non-locating bearing

[1)] Split bearing in associated housing has restricted usability.
Please ask for further information.

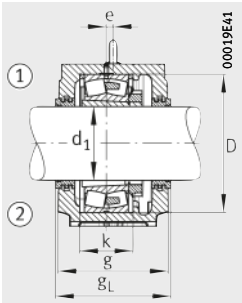

Labyrinth seal NTS

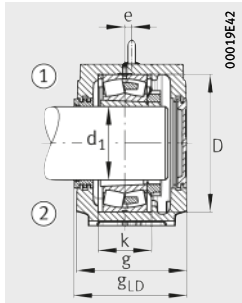

Labyrinth seal NTS Cover NDK

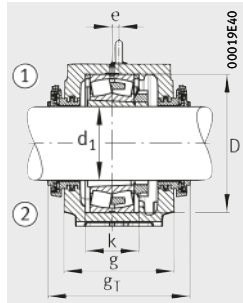

Taconite seal NTC

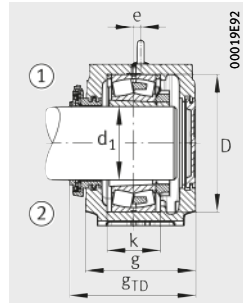

Taconite seal NTC Cover NDK

										Housing		
Adapter sleeve	Locating ring		Labyrinth seal			Taconite seal			Cover	G	Mass	Designation
		Quantity		g_L mm	g_{LD} mm		g_T mm	g_{TD} mm			m ≈ kg	
H3160(-HG)X1015	NFR540/28	2	NTS64X1015	381	375,5	NTC64X1015	460	415	NDK64	M30	368	**SNS3164-H-D**
H3060(-HG)X1015	NFR460/25	2	NTS60X1015	331	325,5	NTC60X1015	410	365	NDK60	M24	260	**SNS3060-H-D**
–	NFR460/25	2	NTS60X1015	331	325,5	NTC60X1015	410	365	NDK60	M24	260	**SNS3060-H-D**
H3160(-HG)X1015	NFR500/10	2	NTS60X1015	361	355,5	NTC60X1015	440	395	NDK60	M30	317	**SNS3160-H-D**
H3260(-HG)X1015	NFR540/10	2	NTS64X1015	381	375,5	NTC64X1015	460	415	NDK64	M30	364	**SNS3260-H-D**
H3160(-HG)X1100	NFR540/28	2	NTS64X1100	381	375,5	NTC64X1100	460	415	NDK64	M30	368	**SNS3164-H-D**
H3060(-HG)X1100	NFR460/25	2	NTS60X1100	331	325,5	NTC60X1100	410	365	NDK60	M24	260	**SNS3060-H-D**
–	NFR460/25	2	NTS60X1100	331	325,5	NTC60X1100	410	365	NDK60	M24	260	**SNS3060-H-D**
H3160(-HG)X1100	NFR500/10	2	NTS60X1100	361	355,5	NTC60X1100	440	395	NDK60	M30	317	**SNS3160-H-D**
–	NFR500/10	2	NTS60X1100	361	355,5	NTC60X1100	440	395	NDK60	M30	317	**SNS3160-H-D**
H3260(-HG)X1100	NFR540/10	2	NTS64X1100	381	375,5	NTC64X1100	460	415	NDK64	M30	364	**SNS3260-H-D**
H3064(-HG)X1107	NFR480/10	6	NTS64X1107	361	355,5	NTC64X1107	440	395	NDK64	M30	332	**SNS3064-H-D**
H3164(-HG)X1108	NFR580/20	2	NTS68X1108	411	405,5	NTC68X1108	490	445	NDK68	M30	466	**SNS2264-H-D**
H3064(-HG)X1108	NFR480/10	6	NTS64X1108	361	355,5	NTC64X1108	440	395	NDK64	M30	332	**SNS3064-H-D**
H3064-HGX1115	NFR480/10	6	NTS64X1115	361	355,5	NTC64X1115	440	395	NDK64	M30	332	**SNS3064-H-D**
H3164-HGX1115	NFR540/10	2	NTS64X1115	381	375,5	NTC64X1115	460	415	NDK64	M30	368	**SNS3164-H-D**
H3264-HGX1115	NFR580/10	2	NTS68X1115	411	405,5	NTC68X1115	490	445	NDK68	M30	457	**SNS3264-H-D**
H3164-HGX1200	NFR580/20	2	NTS68X1200	411	405,5	NTC68X1200	490	445	NDK68	M30	466	**SNS2264-H-D**
H3064-HGX1200	NFR480/10	6	NTS64X1200	361	355,5	NTC64X1200	440	395	NDK64	M30	332	**SNS3064-H-D**
–	NFR480/10	6	NTS64X1200	361	355,5	NTC64X1200	440	395	NDK64	M30	332	**SNS3064-H-D**
H3164-HGX1200	NFR540/10	2	NTS64X1200	381	375,5	NTC64X1200	460	415	NDK64	M30	368	**SNS3164-H-D**
–	NFR540/10	2	NTS64X1200	381	375,5	NTC64X1200	460	415	NDK64	M30	368	**SNS3164-H-D**
H3264-HGX1200	NFR580/10	2	NTS68X1200	411	405,5	NTC68X1200	490	445	NDK68	M30	457	**SNS3264-H-D**
–	NFR580/10	2	NTS68X1200	411	405,5	NTC68X1200	490	445	NDK68	M30	457	**SNS3264-H-D**
H3068-HGX1207	NFR520/16	4	NTS68X1207	381	375,5	NTC68X1207	460	415	NDK68	M30	386	**SNS3068-H-D**
H3168-HGX1207	NFR580/10	2	NTS68X1207	411	405,5	NTC68X1207	490	445	NDK68	M30	461	**SNS3168-H-D**
H3268-HGX1207	NFR620/10	2	NTS76X1207	411	405,5	NTC76X1207	490	445	NDK76	M36	530	**SNS3268-H-D**

Plummer block housings

SNS, split
For spherical roller bearings with tapered bore and adapter sleeve
Inch size shaft

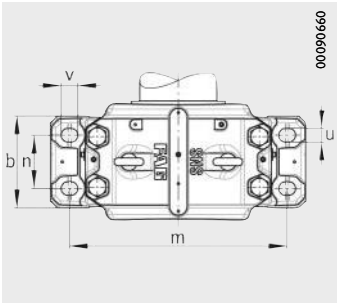

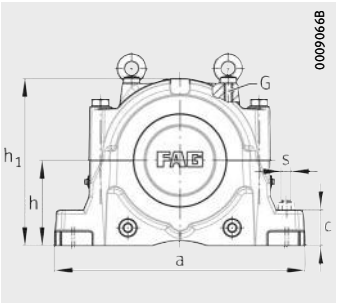

Dimension table (continued) · Dimensions in mm

Shaft		Housing Dimensions														Spherical roller bearing and accessories	
d_1		h	h_1	g	b	c	a	m	n	v	u	s	D	k	e	Bearing	Adapter sleeve
inch	mm																
$12^1/_2$	**317,500**	320	631	370	330	115	880	750	200	50	42	M36	520	197	23	**23068..-K**	H3068-HGX1208
$12^1/_2$	**317,500**	340	675	400	360	120	950	810	220	50	42	M36	580	210	24	**23168..-K**	H3168-HGX1208
$12^1/_2$	**317,500**	340	675	400	360	120	950	810	220	50	42	M36	580	210	24	**231S.1208**	–
$12^1/_2$	**317,500**	360	715	400	360	120	1 040	870	220	50	42	M36	620	244	30	**23268..-K**	H3268-HGX1208
$12^{15}/_{16}$	**328,613**	320	631	370	330	115	880	750	200	50	42	M36	540	198	23	**23072..-K**	H3072-HGX1215
13	**330,200**	380	755	430	390	125	1 120	950	240	60	48	M42	650	220	30	**22272..-K**	H3172-HGX1300
13	**330,200**	320	631	370	330	115	880	750	200	50	42	M36	540	198	23	**23072..-K**	H3072-HGX1300
$13^7/_{16}$	**341,313**	320	631	370	330	115	880	750	200	50	42	M36	540	198	23	**23072..-K**	H3072-HGX1307
$13^7/_{16}$	**341,313**	350	695	400	360	120	1 000	840	220	50	42	M36	600	212	30	**23172..-K**	H3172-HGX1307
$13^7/_{16}$	**341,313**	380	755	430	390	125	1 120	950	240	60	48	M42	650	252	30	**23272..-K**	H3272-HGX1307
$13^1/_2$	**342,900**	380	755	430	390	125	1 120	950	240	60	48	M42	650	220	30	**22272..-K**	H3172-HGX1308
$13^1/_2$	**342,900**	320	631	370	330	115	880	750	200	50	42	M36	540	198	23	**23072..-K**	H3072-HGX1308
$13^1/_2$	**342,900**	350	695	400	360	120	1 000	840	220	50	42	M36	600	212	30	**23172..-K**	H3172-HGX1308
$13^1/_2$	**342,900**	380	755	430	390	125	1 120	950	240	60	48	M42	650	252	30	**23272..-K**	H3272-HGX1308
$13^1/_2$	**342,900**	380	755	430	390	125	1 120	950	240	60	48	M42	650	252	30	**232S.1308**[1)]	–
$13^{15}/_{16}$	**354,013**	340	675	400	360	120	950	810	220	50	42	M36	560	180	24	**23076..-K**	H3076-HGX1315
$13^{15}/_{16}$	**354,013**	360	715	400	360	120	1 040	870	220	50	42	M36	620	214	30	**23176..-K**	H3176-HGX1315
$13^{15}/_{16}$	**354,013**	410	810	460	420	130	1 170	1 000	260	60	48	M42	680	260	35	**23276..-K**	H3276-HGX1315
14	**355,600**	340	675	400	360	120	950	810	220	50	42	M36	560	180	24	**23076..-K**	H3076-HGX1400
14	**355,600**	340	675	400	360	120	950	810	220	50	42	M36	560	180	24	**230S.1400**	–
14	**355,600**	360	715	400	360	120	1 040	870	220	50	42	M36	620	214	30	**23176..-K**	H3176-HGX1400
14	**355,600**	360	715	400	360	120	1 040	870	220	50	42	M36	620	214	30	**231S.1400**[1)]	–
14	**355,600**	410	810	460	420	130	1 170	1 000	260	60	48	M42	680	260	35	**23276..-K**	H3276-HGX1400
15	**381,000**	350	695	400	360	120	1 000	840	220	50	42	M36	600	192	30	**23080..-K**	H3080-HGX1500
15	**381,000**	380	755	430	390	125	1 120	950	240	60	48	M42	650	220	30	**23180..-K**	H3180-HGX1500
15	**381,000**	380	755	430	390	125	1 120	950	240	60	48	M42	650	220	30	**231S.1500**[1)]	–
15	**381,000**	420	835	460	430	135	1 220	1 030	260	60	48	M42	720	276	35	**23280..-K**	H3280-HGX1500

① Locating bearing; ② Non-locating bearing

[1)] Split bearing in associated housing has restricted usability.
Please ask for further information.

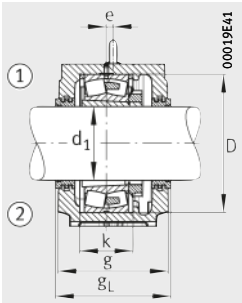

Labyrinth seal NTS

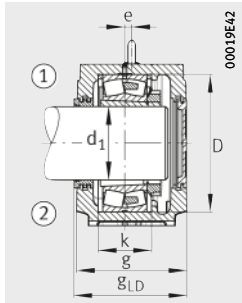

Labyrinth seal NTS
Cover NDK

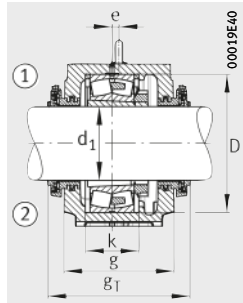

Taconite seal NTC

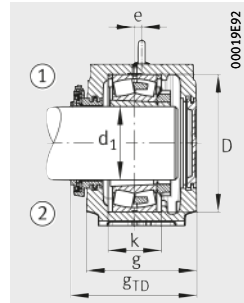

Taconite seal NTC
Cover NDK

									Housing		
Locating ring		Labyrinth seal			Taconite seal			Cover	G	Mass	Designation
	Quantity		g_L mm	g_{LD} mm		g_T mm	g_{TD} mm			m ≈ kg	
NFR520/16	4	NTS68X1208	381	375,5	NTC68X1208	460	415	NDK68	M30	386	**SNS3068-H-D**
NFR580/10	2	NTS68X1208	411	405,5	NTC68X1208	490	445	NDK68	M30	461	**SNS3168-H-D**
NFR580/10	2	NTS68X1208	411	405,5	NTC68X1208	490	445	NDK68	M30	461	**SNS3168-H-D**
NFR620/10	2	NTS76X1208	411	405,5	NTC76X1208	490	445	NDK76	M36	530	**SNS3268-H-D**
NFR540/16	4	NTS72X1215	381	375,5	NTC72X1215	460	415	NDK72	M30	356	**SNS3072-H-D**
NFR650/25	2	NTS80X1300	441	435,5	NTC80X1300	520	475	NDK80	M42	681	**SNS3180-H-D**
NFR540/16	4	NTS72X1300	381	375,5	NTC72X1300	460	415	NDK72	M30	356	**SNS3072-H-D**
NFR540/16	4	NTS72X1307	381	375,5	NTC72X1307	460	415	NDK72	M30	356	**SNS3072-H-D**
NFR600/10	2	NTS72X1307	411	405,5	NTC72X1307	490	445	NDK72	M36	498	**SNS3172-H-D**
NFR650/10	2	NTS80X1307	441	435,5	NTC80X1307	520	475	NDK80	M42	675	**SNS3272-H-D**
NFR650/25	2	NTS80X1308	441	435,5	NTC80X1308	520	475	NDK80	M42	681	**SNS3180-H-D**
NFR540/16	4	NTS72X1308	381	375,5	NTC72X1308	460	415	NDK72	M30	356	**SNS3072-H-D**
NFR600/10	2	NTS72X1308	411	405,5	NTC72X1308	490	445	NDK72	M36	498	**SNS3172-H-D**
NFR650/10	2	NTS80X1308	441	435,5	NTC80X1308	520	475	NDK80	M42	675	**SNS3272-H-D**
NFR650/10	2	NTS80X1308	441	435,5	NTC80X1308	520	475	NDK80	M42	675	**SNS3272-H-D**
NFR560/22,5	2	NTS76X1315	411	405,5	NTC76X1315	490	445	NDK76	M30	481	**SNS3076-H-D**
NFR620/10	2	NTS76X1315	411	405,5	NTC76X1315	490	445	NDK76	M36	534	**SNS3176-H-D**
NFR680/10	2	NTS92X1315	471	465,5	NTC92X1315	550	505	NDK92	M42	841	**SNS3276-H-D**
NFR560/22,5	2	NTS76X1400	411	405,5	NTC76X1400	490	445	NDK76	M30	481	**SNS3076-H-D**
NFR560/22,5	2	NTS76X1400	411	405,5	NTC76X1400	490	445	NDK76	M30	481	**SNS3076-H-D**
NFR620/10	2	NTS76X1400	411	405,5	NTC76X1400	490	445	NDK76	M36	534	**SNS3176-H-D**
NFR620/10	2	NTS76X1400	411	405,5	NTC76X1400	490	445	NDK76	M36	534	**SNS3176-H-D**
NFR680/10	2	NTS92X1400	471	465,5	NTC92X1400	550	505	NDK92	M42	841	**SNS3276-H-D**
NFR600/22	2	NTS80X1500	411	405,5	NTC80X1500	490	445	NDK80	M36	489	**SNS3080-H-D**
NFR650/10	2	NTS80X1500	441	435,5	NTC80X1500	520	475	NDK80	M42	681	**SNS3180-H-D**
NFR650/10	2	NTS80X1500	441	435,5	NTC80X1500	520	475	NDK80	M42	681	**SNS3180-H-D**
NFR720/10	2	NTS88X1500	471	465,5	NTC88X1500	550	505	NDK88	M42	895	**SNS3280-H-D**

Plummer block housings

SNS, split
For spherical roller bearings with tapered bore and adapter sleeve
Inch size shaft

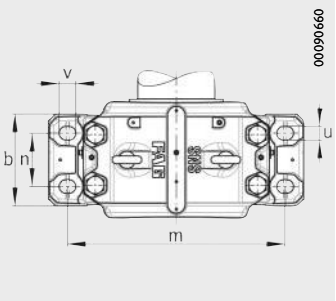

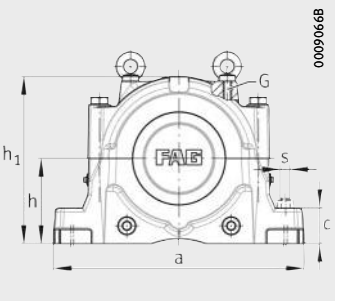

Dimension table (continued) · Dimensions in mm

Shaft		Housing Dimensions														Spherical roller bearing and accessories	
d_1		h	h_1	g	b	c	a	m	n	v	u	s	D	k	e	Bearing	Adapter sleeve
inch	mm																
$15^3/_4$	**400,050**	360	715	400	360	120	1 040	870	220	50	42	M36	620	194	30	**23084..-K**	H3084X-HGX1512
$15^3/_4$	**400,050**	410	810	460	420	130	1 170	1 000	260	60	48	M42	700	244	35	**23184..-K**	H3184-HGX1512
$15^3/_4$	**400,050**	440	880	470	440	145	1 280	1 070	260	60	48	M42	760	292	35	**23284..-K**	H3284-HGX1512
$16^1/_2$	**419,100**	380	755	430	390	125	1 120	950	240	60	48	M42	650	200	30	**23088..-K**	H3088-HGX1608
$16^1/_2$	**419,100**	380	755	430	390	125	1 120	950	240	60	48	M42	650	200	30	**230S.1608**	–
$16^1/_2$	**419,100**	420	835	460	430	135	1 220	1 030	260	60	48	M42	720	246	35	**23188..-K**	H3188-HGX1608
$16^1/_2$	**419,100**	460	920	470	440	155	1 330	1 110	260	70	56	M48	790	300	35	**23288..-K**	H3288-HGX1608
17	**431,800**	410	810	460	420	130	1 170	1 000	260	60	48	M42	680	224	35	**23092..-K**	H3092-HGX1700
17	**431,800**	440	880	470	440	145	1 280	1 070	260	60	48	M42	760	260	35	**23192..-K**	H3192-HGX1700
18	**457,200**	410	810	460	420	130	1 170	1 000	260	60	48	M42	700	224	35	**23096..-K**	H3096-HGX1800
18	**457,200**	460	920	470	440	155	1 330	1 110	260	70	56	M48	790	268	35	**23196..-K**	H3196-HGX1800
$18^1/_2$	**469,900**	420	835	460	430	135	1 220	1 030	260	60	48	M42	720	226	35	**230/500..-K**	H30/500-HGX1808
$19^1/_2$	**495,300**	460	920	470	440	155	1 330	1 110	260	70	56	M48	780	248	35	**230/530..-K**	H30/530-HGX1908

① Locating bearing; ② Non-locating bearing

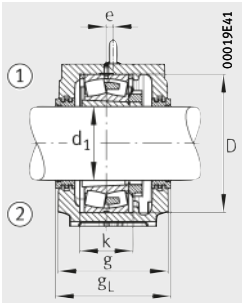

Labyrinth seal NTS

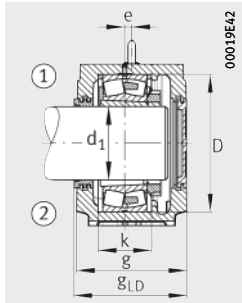

Labyrinth seal NTS
Cover NDK

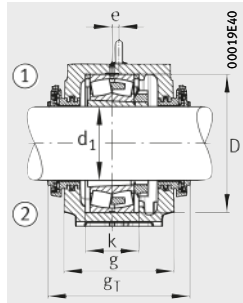

Taconite seal NTC

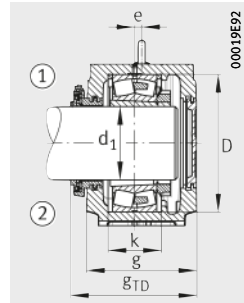

Taconite seal NTC
Cover NDK

									Housing		
Locating ring		Labyrinth seal			Taconite seal			Cover	G	Mass	Designation
	Quantity		g_L mm	g_{LD} mm		g_T mm	g_{TD} mm			m ≈ kg	
NFR620/22	2	NTS84X1512	411	405,5	NTC84X1512	490	445	NDK84	M36	527	**SNS3084-H-D**
NFR700/10	2	NTS84X1512	471	465,5	NTC84X1512	550	505	NDK84	M42	821	**SNS3184-H-D**
NFR760/10	2	NTS92X1512	481	475,5	NTC92X1512	560	515	NDK92	M48	984	**SNS3284-H-D**
NFR650/21,5	2	NTS88X1608	441	435,5	NTC88X1608	520	475	NDK88	M42	672	**SNS3088-H-D**
NFR650/21,5	2	NTS88X1608	441	435,5	NTC88X1608	520	475	NDK88	M42	672	**SNS3088-H-D**
NFR720/10	2	NTS88X1608	471	465,5	NTC88X1608	550	505	NDK88	M42	895	**SNS3188-H-D**
NFR790/10	2	NTS96X1608	481	475,5	NTC96X1608	560	515	NDK96	M48	1 100	**SNS3288-H-D**
NFR680/30,5	2	NTS92X1700	471	465,5	NTC92X1700	550	505	NDK92	M42	849	**SNS3092-H-D**
NFR760/10	2	NTS92X1700	481	475,5	NTC92X1700	560	515	NDK92	M48	993	**SNS3192-H-D**
NFR700/29,5	2	NTS96X1800	471	465,5	NTC96X1800	550	505	NDK96	M42	806	**SNS3096-H-D**
NFR790/10	2	NTS96X1800	481	475,5	NTC96X1800	560	515	NDK96	M48	1 100	**SNS3196-H-D**
NFR720/29,5	2	NTS500X1808	471	465,5	NTC500X1808	550	505	NDK500	M42	895	**SNS30/500-H-D**
NFR780/31,5	2	NTS530X1908	481	475,5	NTC530X1908	560	515	NDK530	M48	1 100	**SNS30/530-H-D**

Plummer block housings

SNS, split
For spherical roller bearings with tapered bore and adapter sleeve
Metric shaft
Bolt-on design

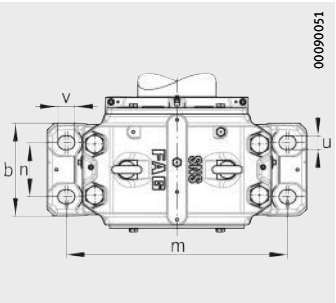

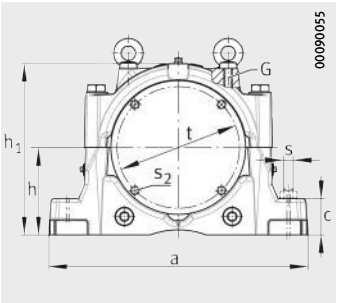

Dimension table · Dimensions in mm

Shaft	Housing Dimensions																		Spherical roller bearing and accessories
d_1	h	h_1	g	b	c	a	m	n	v	u	s	D_z	D	k	e	t	s_2		Bearing
																		Quantity	
150	170	333	219	180	70	510	430	100	34	28	M24	210	280	108	14	240	M8	4	**23134..-K**
150	170	333	219	180	70	510	430	100	34	28	M24	210	280	108	14	240	M8	4	**231SM150-MA**[1)]
160	180	353	226	190	75	530	450	110	34	28	M24	220	300	116	15	250	M10	4	**23136..-K**
160	180	353	226	190	75	530	450	110	34	28	M24	220	300	116	15	250	M10	4	**231SM160-MA**[1)]
170	190	375	246	210	80	560	480	120	34	28	M24	230	320	124	10	266	M8	4	**23138..-K**
170	190	375	246	210	80	560	480	120	34	28	M24	230	320	124	10	266	M8	4	**231SM170-MA**
180	210	411	266	230	85	610	510	130	42	35	M30	250	340	132	10	286	M8	4	**23140..-K**
180	210	411	266	230	85	610	510	130	42	35	M30	250	340	132	10	286	M8	4	**231SM180-MA**
200	220	434	278	240	90	640	540	140	42	35	M30	270	370	140	12	310	M10	4	**23144..-K**
200	220	434	278	240	90	640	540	140	42	35	M30	270	370	140	12	310	M10	4	**231SM200-MA**[1)]
220	240	474	300	260	95	700	600	150	42	35	M30	300	400	148	12	336	M10	4	**23148..-K**
220	240	474	300	260	95	700	600	150	42	35	M30	300	400	148	12	336	M10	4	**231SM220-MA**
240	260	516	310	280	100	770	650	160	50	42	M36	320	440	164	13	356	M10	4	**23152..-K**
240	260	516	310	280	100	770	650	160	50	42	M36	320	440	164	13	356	M10	4	**231SM240-MA**[1)]
260	280	550	310	280	105	790	670	160	50	42	M36	340	460	166	16	380	M10	4	**23156..-K**
260	280	550	310	280	105	790	670	160	50	42	M36	340	460	166	16	380	M10	4	**231SM260-MA**
280	300	591	340	310	110	830	710	190	50	42	M36	355	500	180	22	412	M10	8	**23160..-K**
280	300	591	340	310	110	830	710	190	50	42	M36	355	500	180	22	412	M10	8	**231SM280-MA**[1)]
300	320	631	360	330	115	880	750	200	50	42	M36	380	540	196	23	436	M10	8	**23164..-K**
300	320	631	360	330	115	880	750	200	50	42	M36	380	540	196	23	436	M10	8	**231SM300-MA**[1)]
320	340	675	392	360	120	950	810	220	50	42	M36	400	580	210	24	468	M10	8	**23168..-K**
320	340	675	392	360	120	950	810	220	50	42	M36	400	580	210	24	468	M10	8	**231SM320-MA**

① Locating bearing; ② Non-locating bearing

[1)] Split bearing in associated housing has restricted usability.
Please ask for further information.

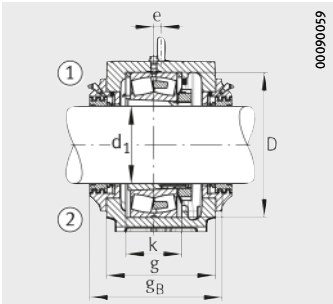

Bolt-on seal BTAC

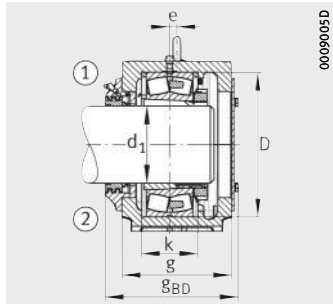

Bolt-on seal BTAC
Cover BDK

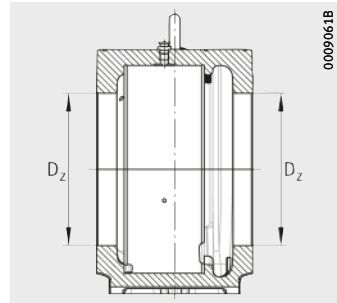

							Housing		
Adapter sleeve	Locating ring		Bolt-on seal			Cover	G	Mass	Designation
		Quantity		g_B mm	g_{BD} mm			m ≈ kg	
H3134(-HG)	NFR280/10	2	BTAC34	289	268	BDK34	M16	70	**SNS3134-B-D**
–	NFR280/10	2	BTAC34	289	268	BDK34	M16	70	**SNS3134-B-D**
H3136(-HG)	NFR300/10	2	BTAC36	296	275	BDK36	M16	78	**SNS3136-B-D**
–	NFR300/10	2	BTAC36	296	275	BDK36	M16	78	**SNS3136-B-D**
H3138(-HG)	NFR320/10	2	BTAC38	316	295	BDK38	M20	96	**SNS3138-B-D**
–	NFR320/10	2	BTAC38	316	295	BDK38	M20	96	**SNS3138-B-D**
H3140(-HG)	NFR340/10	2	BTAC40	336	315	BDK40	M20	123	**SNS3140-B-D**
–	NFR340/10	2	BTAC40	336	315	BDK40	M20	123	**SNS3140-B-D**
H3144X(-HG)	NFR370/10	2	BTAC44	348	327	BDK44	M20	137	**SNS3144-B-D**
–	NFR370/10	2	BTAC44	348	327	BDK44	M20	137	**SNS3144-B-D**
H3148X(-HG)	NFR400/10	2	BTAC48	378	353	BDK48	M24	173	**SNS3148-B-D**
–	NFR400/10	2	BTAC48	378	353	BDK48	M24	173	**SNS3148-B-D**
H3152X(-HG)	NFR440/10	2	BTAC52	392	365	BDK52	M24	226	**SNS3152-B-D**
–	NFR440/10	2	BTAC52	392	365	BDK52	M24	226	**SNS3152-B-D**
H3156X(-HG)	NFR460/10	2	BTAC56	392	365	BDK56	M24	252	**SNS3156-B-D**
–	NFR460/10	2	BTAC56	392	365	BDK56	M24	252	**SNS3156-B-D**
H3160(-HG)	NFR500/10	2	BTAC60	422	395	BDK60	M30	305	**SNS3160-B-D**
–	NFR500/10	2	BTAC60	422	395	BDK60	M30	305	**SNS3160-B-D**
H3164-HG	NFR540/10	2	BTAC64	442	415	BDK64	M30	354	**SNS3164-B-D**
–	NFR540/10	2	BTAC64	442	415	BDK64	M30	354	**SNS3164-B-D**
H3168-HG	NFR580/10	2	BTAC68	480	450	BDK68	M30	446	**SNS3168-B-D**
–	NFR580/10	2	BTAC68	480	450	BDK68	M30	446	**SNS3168-B-D**

Notes

Notes

MATNR 081483481-0000 / TPI 231 / 02 / GB-D / 2015111 / Printed in Germany by bresler

Schaeffler Technologies AG & Co. KG

Georg-Schäfer-Straße 30
97421 Schweinfurt
Germany
Internet www.fag.com
E-mail faginfo@schaeffler.com

In Germany:
Phone 0180 5003872
Fax 0180 5003873

From other countries:
Phone +49 9721 91-0
Fax +49 9721 91-3435

Every care has been taken to ensure the correctness of the information contained in this publication but no liability can be accepted for any errors or omissions.
We reserve the right to make technical changes.

© Schaeffler Technologies AG & Co. KG
Issued: 2015, November

This publication or parts thereof may not be reproduced without our permission.
TPI 231 GB-D